ProductionV2SiemensTIA

Table of contents

Main [OB1]	3 - 1
Component-Assembly [FC2]	4 - 1
Item-Transfer-Package [FC1]	5 - 1
MHJ-PLC-Lab-Function-S71200 [FC9000]	6 - 1
Supply-Storage [FC3]	7 - 1
Pallet_load [FB4]	8 - 1
Pallet-stack [FB3]	9 - 1
Pick and Place XYZ Alg(medium pallet) [FB1]	10 - 1
Pick and Place XYZ Alg(small pallet) [FB2]	11 - 1

Main [OB1]

Main Properties							
General							
Name	Main	**Number**	1	**Type**	OB	**Language**	LAD
Numbering	Automatic						
Information							
Title	"Main Program Sweep (Cycle)"	**Author**		**Comment**		**Family**	
Version	0.1	**User-defined ID**					

Name	Data type	Default value	Comment
Input			
Initial_Call	Bool		Initial call of this OB
Remanence	Bool		=True, if remanent data are available
Temp			
Constant			

Network 1: Factory IO Communicator(DONT DELETE)

#Deutsch (#English below)
Im Netzwerk 1 wird der Konnektierungsbaustein für PLC-Lab aufgerufen.
Dieser Aufruf darf nicht entfernt werden!

#English
The connection block for PLC-Lab is called up in network 1.
This call must not be removed!

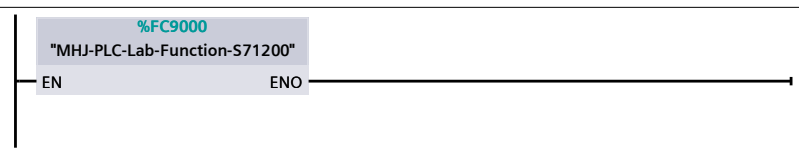

Network 2: Item Transfer Package Line

When the Stacker arrives to the loading pt, stops for 5s and proceed

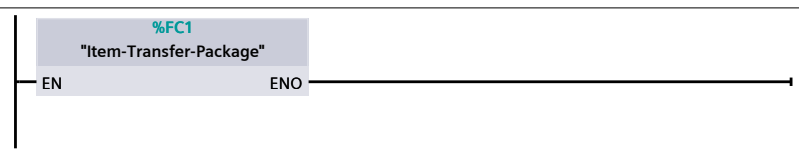

Network 3: Component Assembly Line

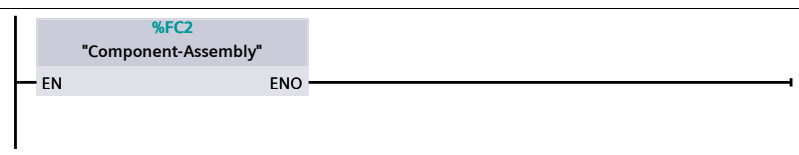

Network 4: Supply Storage Line

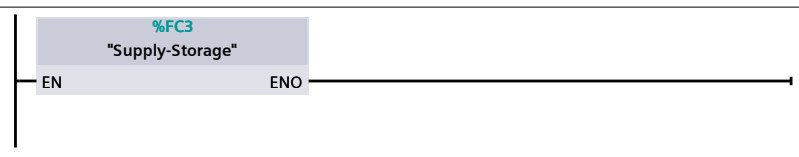

Network 5: Palletizer

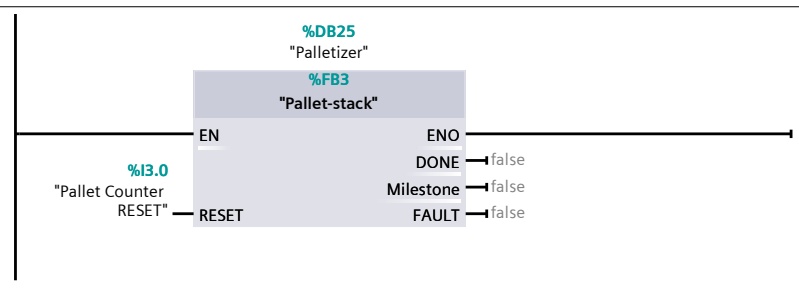

Network 6: Pallet Loading line

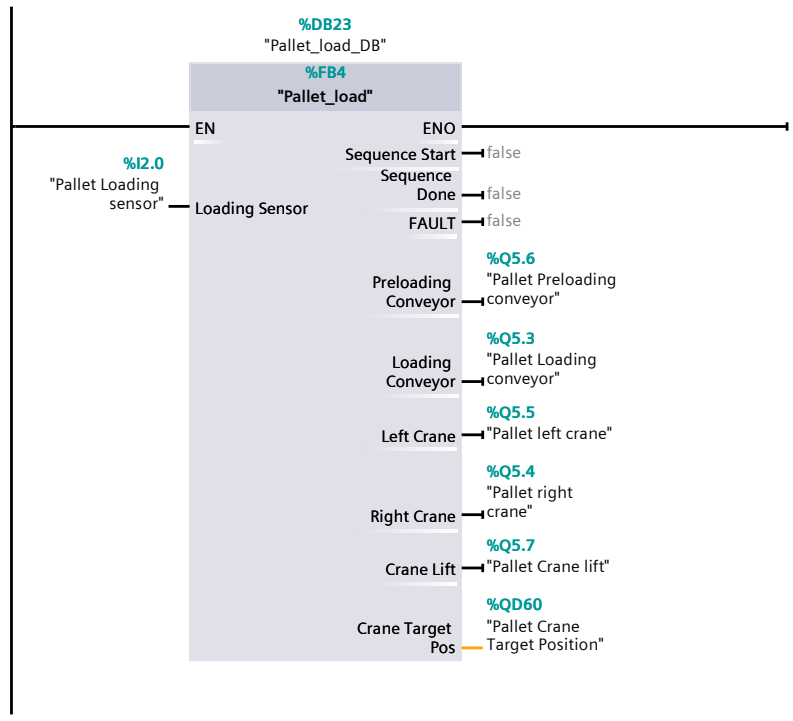
%DB23
"Pallet_load_DB"
%FB4
"Pallet_load"
EN
ENO
%I2.0
"Pallet Loading sensor"
Loading Sensor
Sequence Start
false
Sequence Done
false
FAULT
false
Preloading Conveyor
%Q5.6
"Pallet Preloading conveyor"
Loading Conveyor
%Q5.3
"Pallet Loading conveyor"
Left Crane
%Q5.5
"Pallet left crane"
Right Crane
%Q5.4
"Pallet right crane"
Crane Lift
%Q5.7
"Pallet Crane lift"
Crane Target Pos
%QD60
"Pallet Crane Target Position"

Component-Assembly [FC2]

Component-Assembly Properties							
General							
Name	Component-Assembly	**Number**	2	**Type**	FC	**Language**	LAD
Numbering	Automatic						
Information							
Title		**Author**		**Comment**		**Family**	
Version	0.1	**User-defined ID**					

Name	Data type	Default value	Comment
Input			
Output			
InOut			
Temp			
Constant			
Return			
Component-Assembly	Void		

Network 1: Pusher Trigger

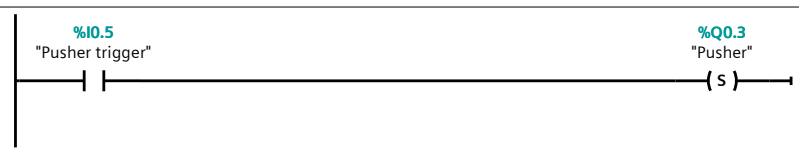

Network 2: Pusher Actuator

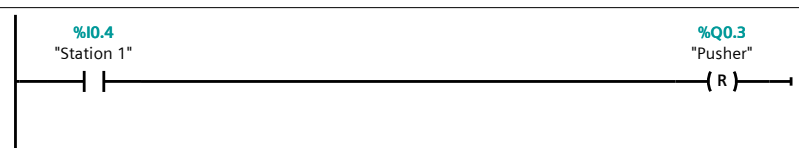

Network 3: Arm sorter

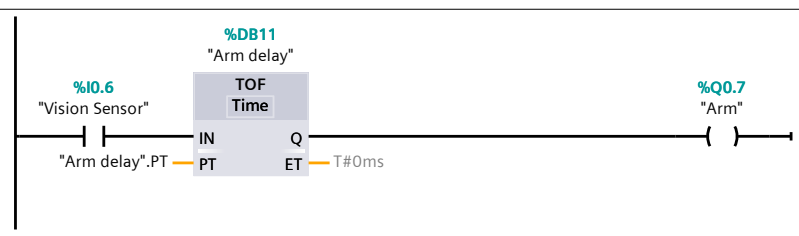

Network 4: Clamp algorithm

Component active

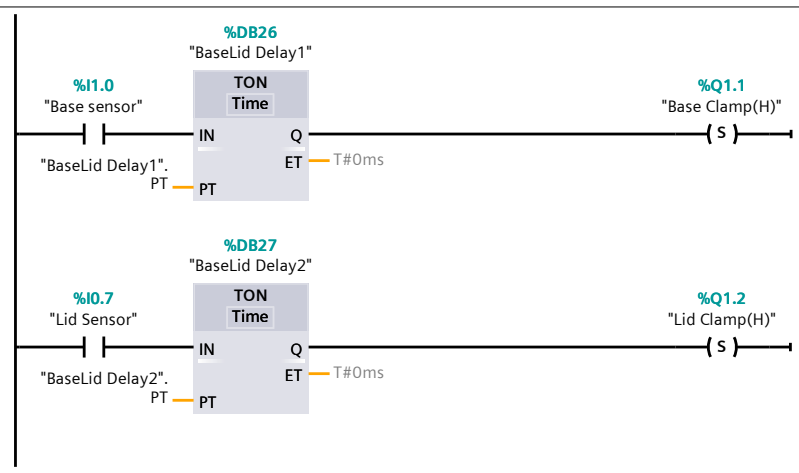

Network 5: Pick and place algorithm + Component Assembly

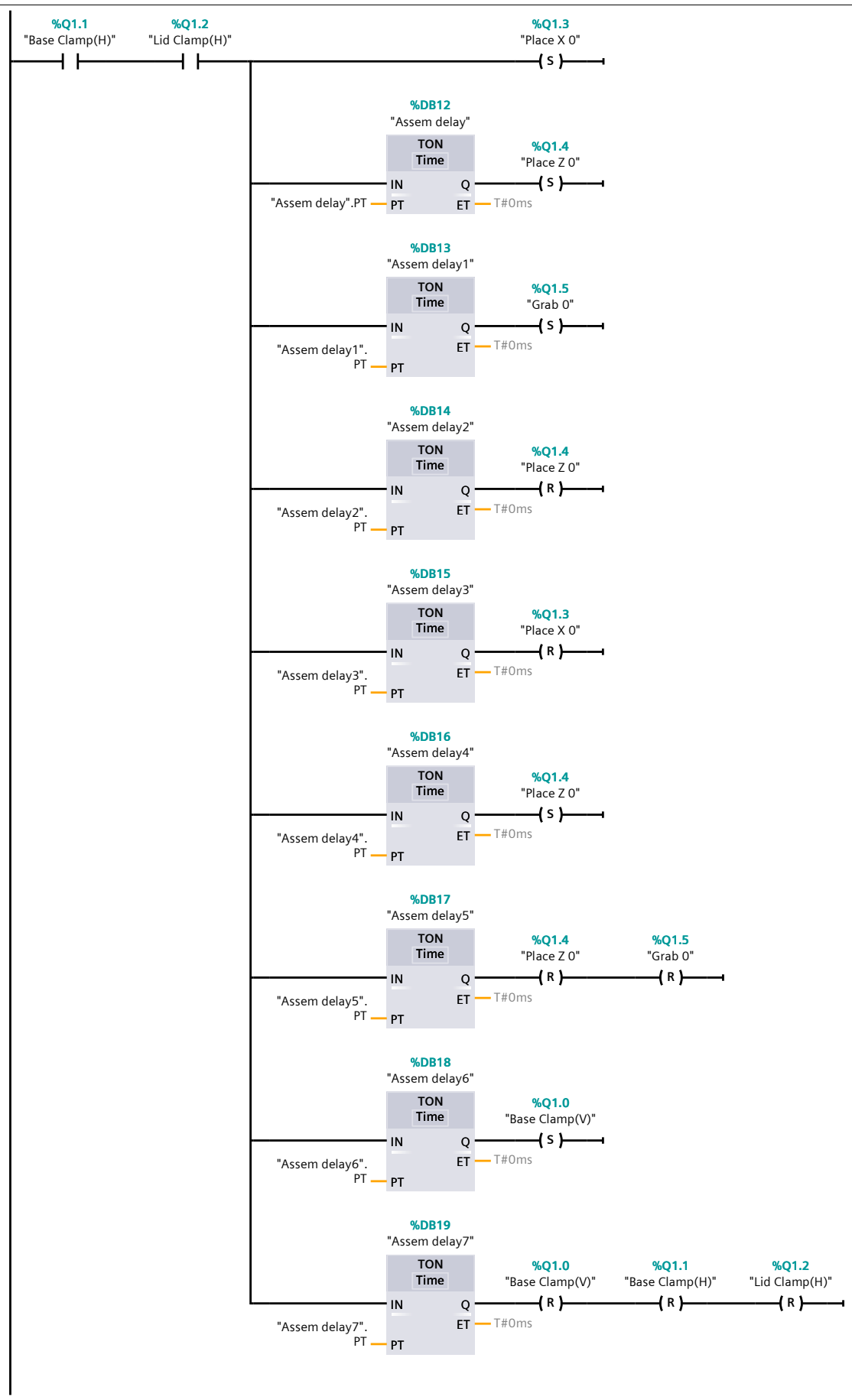
%Q1.1
"Base Clamp(H)"
%Q1.2
"Lid Clamp(H)"
%Q1.3
"Place X 0"
S
%DB12
"Assem delay"
TON
Time
IN
Q
PT
ET
"Assem delay".PT
T#0ms
%Q1.4
"Place Z 0"
S
%DB13
"Assem delay1"
TON
Time
IN
Q
PT
ET
"Assem delay1".
PT
T#0ms
%Q1.5
"Grab 0"
S
%DB14
"Assem delay2"
TON
Time
IN
Q
PT
ET
"Assem delay2".
PT
T#0ms
%Q1.4
"Place Z 0"
R
%DB15
"Assem delay3"
TON
Time
IN
Q
PT
ET
"Assem delay3".
PT
T#0ms
%Q1.3
"Place X 0"
R
%DB16
"Assem delay4"
TON
Time
IN
Q
PT
ET
"Assem delay4".
PT
T#0ms
%Q1.4
"Place Z 0"
S
%DB17
"Assem delay5"
TON
Time
IN
Q
PT
ET
"Assem delay5".
PT
T#0ms
%Q1.4
"Place Z 0"
R
%Q1.5
"Grab 0"
R
%DB18
"Assem delay6"
TON
Time
IN
Q
PT
ET
"Assem delay6".
PT
T#0ms
%Q1.0
"Base Clamp(V)"
S
%DB19
"Assem delay7"
TON
Time
IN
Q
PT
ET
"Assem delay7".
PT
T#0ms
%Q1.0
"Base Clamp(V)"
R
%Q1.1
"Base Clamp(H)"
R
%Q1.2
"Lid Clamp(H)"
R

Item-Transfer-Package [FC1]

Item-Transfer-Package Properties							
General							
Name	Item-Transfer-Package	**Number**	1	**Type**	FC	**Language**	LAD
Numbering	Automatic						
Information							
Title		**Author**		**Comment**		**Family**	
Version	0.1	**User-defined ID**					

Name	Data type	Default value	Comment
Input			
Output			
InOut			
Temp			
Constant			
Return			
Item-Transfer-Package	Void		

Network 1: Item Packaging

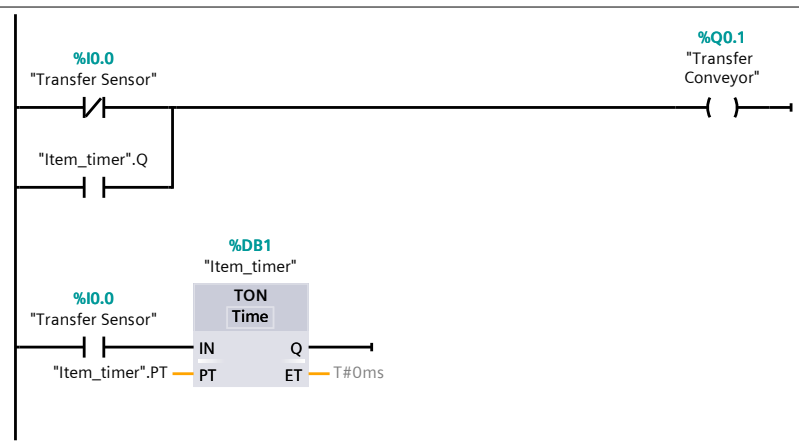

Network 2: Cart Redirect

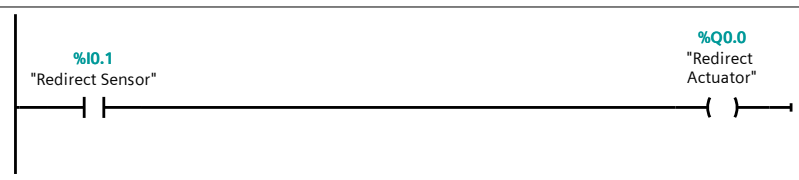

Network 3: Component transfer

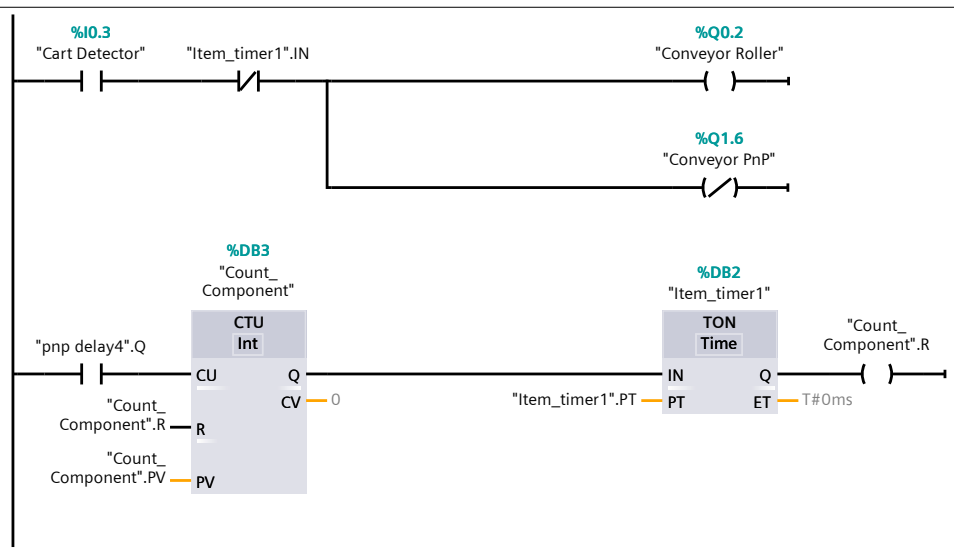

Network 4: pick and place algorithm pt1

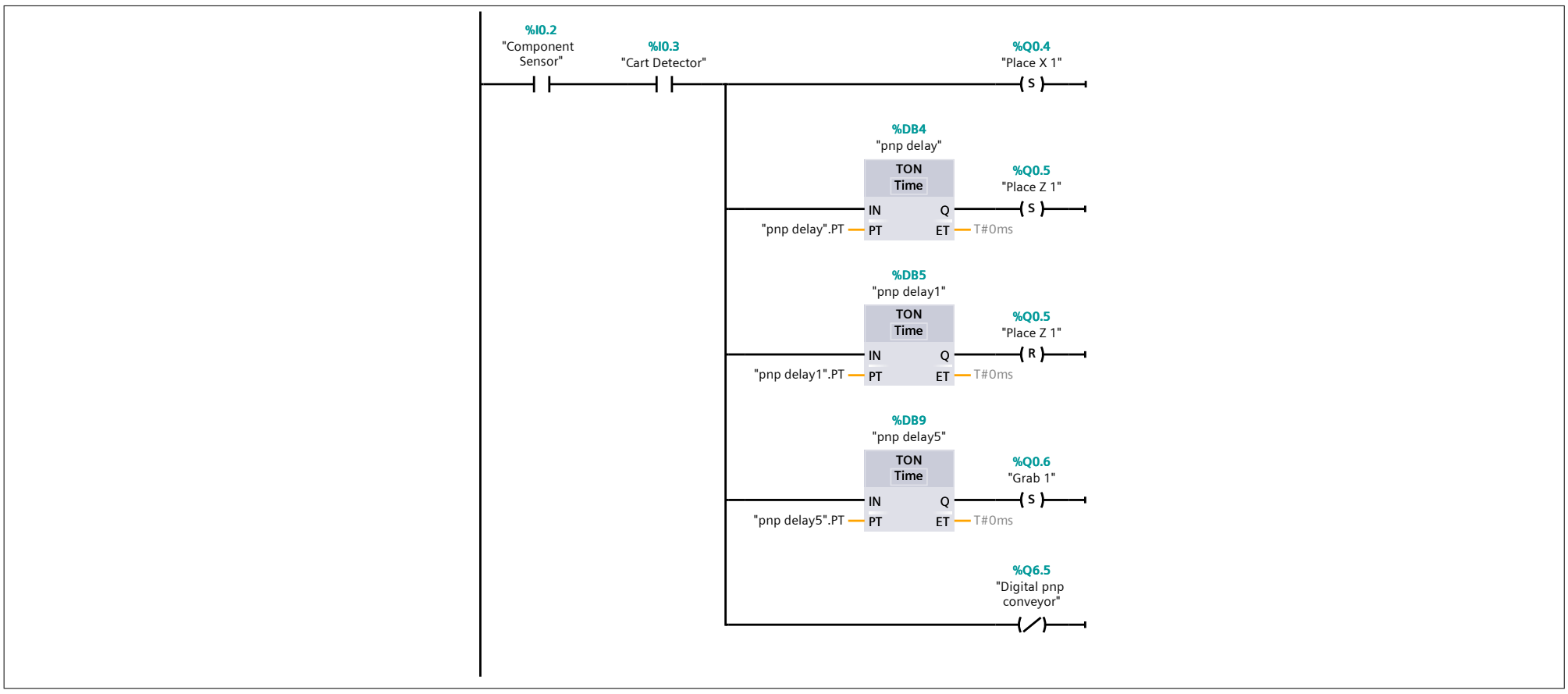

Network 5: pick and place algorithm pt2

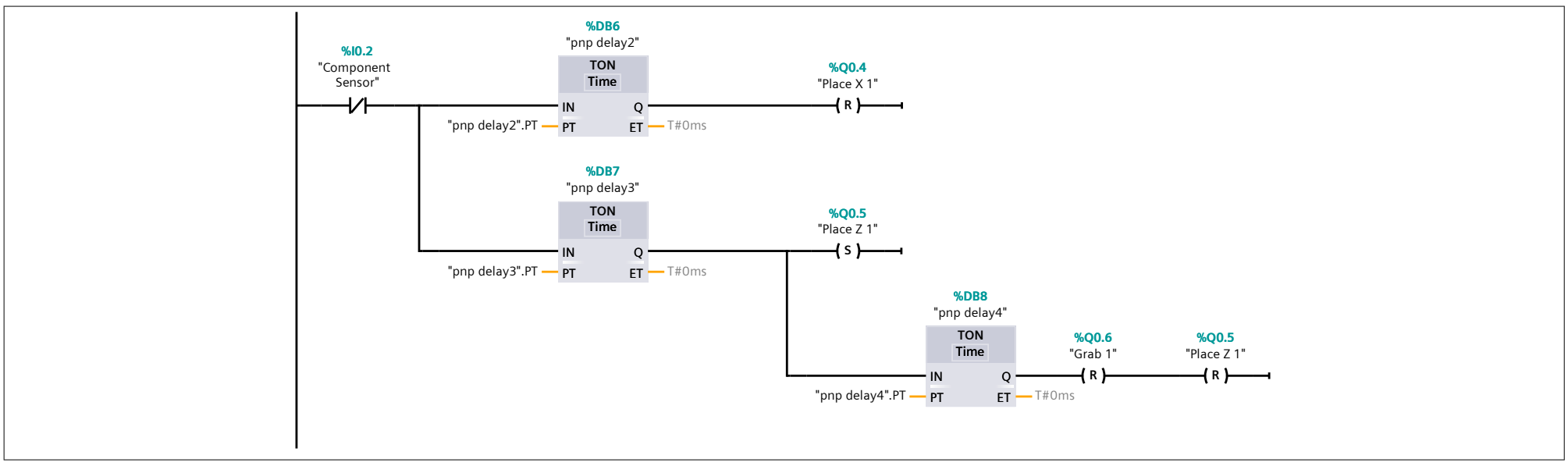

Network 6:

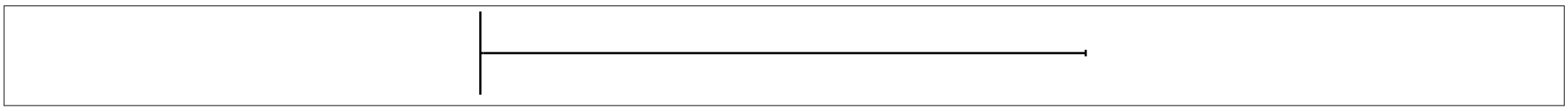

MHJ-PLC-Lab-Function-S71200 [FC9000]

MHJ-PLC-Lab-Function-S71200 Properties							
General							
Name	MHJ-PLC-Lab-Function-S71200	**Number**	9000	**Type**	FC	**Language**	SCL
Numbering	Manual						
Information							
Title		**Author**		**Comment**		**Family**	
Version	0.1	**User-defined ID**					

Name	Data type	Default value	Comment
Input			
Output			
InOut			
Temp			
rdTimeReturn	Int		
outputTime	DTL		
YEAR	UInt		
MONTH	USInt		
DAY	USInt		
WEEKDAY	USInt		
HOUR	USInt		
MINUTE	USInt		
SECOND	USInt		
NANOSECOND	UDInt		
SyncVal	Byte		
forVal	Int		
forVal_2	Int		
Value	Byte		
Constant			
CompVal	Byte	16#34	
Value_01	Byte	16#11	
Value_01_DW	DWord	16#A165_D992	
Value_02_DW	DWord	16#58BE_4401	
Return			
MHJ-PLC-Lab-Function-S71200	Void		

```
0001
0002 #Value:=PEEK(area := 16#82,
0003    dbNumber := 0,
0004    byteOffset := 511);
0005 #Value := #Value + 1;
0006
0007 POKE(area := 16#82,
0008    dbNumber := 0,
0009    byteOffset := 511,
0010    value := #Value);
0011
0012 POKE(area:=16#81,
0013    dbNumber:=0,
0014    byteOffset:=1016,
0015    value:=#Value_01_DW);
0016 POKE(area := 16#81,
0017    dbNumber := 0,
0018    byteOffset := 1020,
0019    value := #Value_02_DW);
0020
0021 POKE(area := 16#81,
0022    dbNumber := 0,
0023    byteOffset := 511,
0024    value := B#16#00);
0025
0026 FOR #forVal := 0 TO 120 DO
0027   FOR #forVal_2:=0 TO 10 DO
0028     #rdTimeReturn:=RD_SYS_T(#outputTime);
0029     #rdTimeReturn := WR_SYS_T(#outputTime);
0030     #rdTimeReturn := RD_SYS_T(#outputTime);
0031     #rdTimeReturn := WR_SYS_T(#outputTime);
0032   END_FOR;
0033   #SyncVal:= PEEK(area := 16#81,
0034            dbNumber := 0,
0035            byteOffset := 511);
0036   IF #SyncVal = #CompVal THEN
0037      GOTO M_1;
0038   END_IF;
0039 END_FOR;
0040 RETURN;
0041
0042 M_1:
0043 POKE(area := 16#81,
0044    dbNumber := 0,
0045    byteOffset := 511,
```

```
0046     value := B#16#0);
0047
0048
0049
```

Symbol	Address	Type	Comment
#CompVal	16#34	Byte	
#forVal		Int	
#forVal_2		Int	
#outputTime		DTL	
#rdTimeReturn		Int	
#SyncVal		Byte	
#Value		Byte	
#Value_01_DW	16#A165_D992	DWord	
#Value_02_DW	16#58BE_4401	DWord	

Supply-Storage [FC3]

Supply-Storage Properties							
General							
Name	Supply-Storage	**Number**	3	**Type**	FC	**Language**	LAD
Numbering	Automatic						
Information							
Title		**Author**		**Comment**		**Family**	
Version	0.1	**User-defined ID**					

Name	Data type	Default value	Comment
Input			
Output			
InOut			
Temp			
ptrig	Bool		
Constant			
Return			
Supply-Storage	Void		

Network 1: Conveyor scale Retrigger

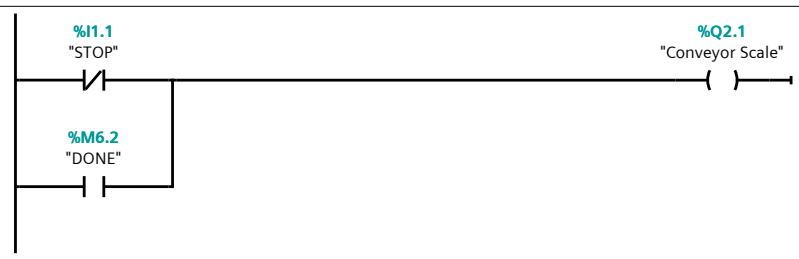

Network 2: Box Stopper Retrigger

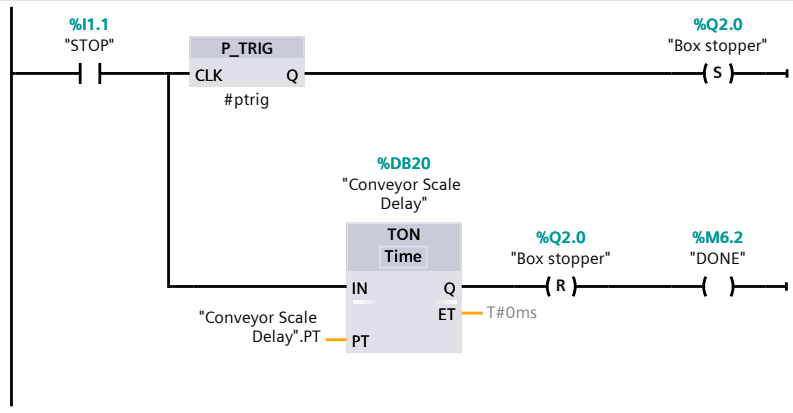

Network 3: Box Arm sorter by weight

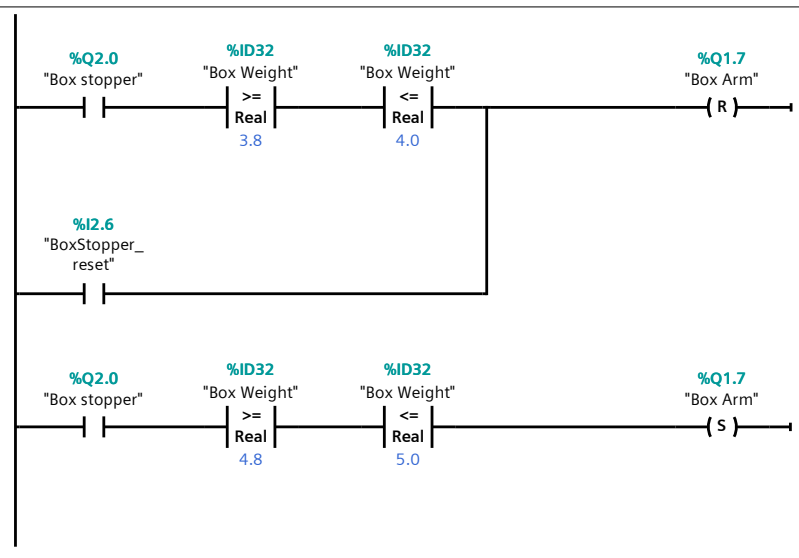

Network 4: PnP Conveyor Control

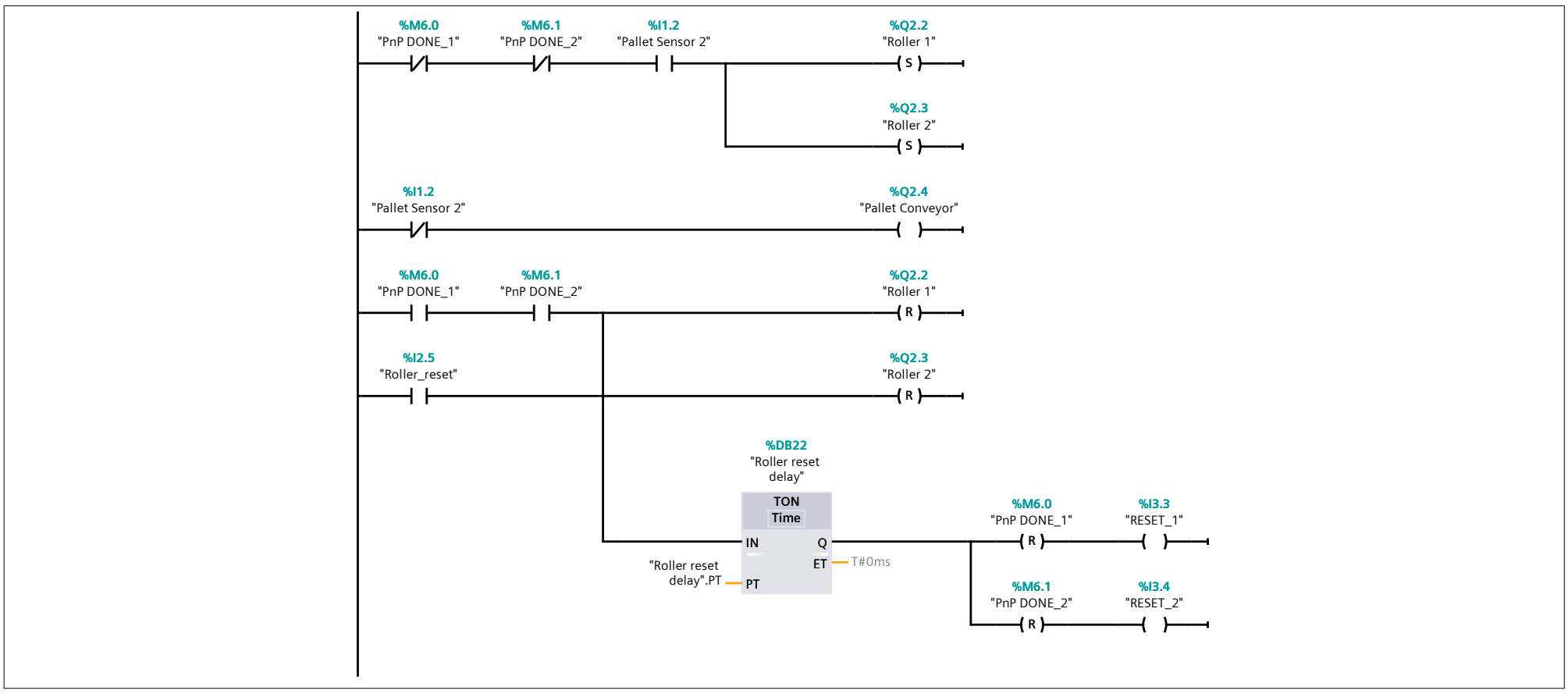

Network 5: Pick and Place XYZ analog 1

Station 1

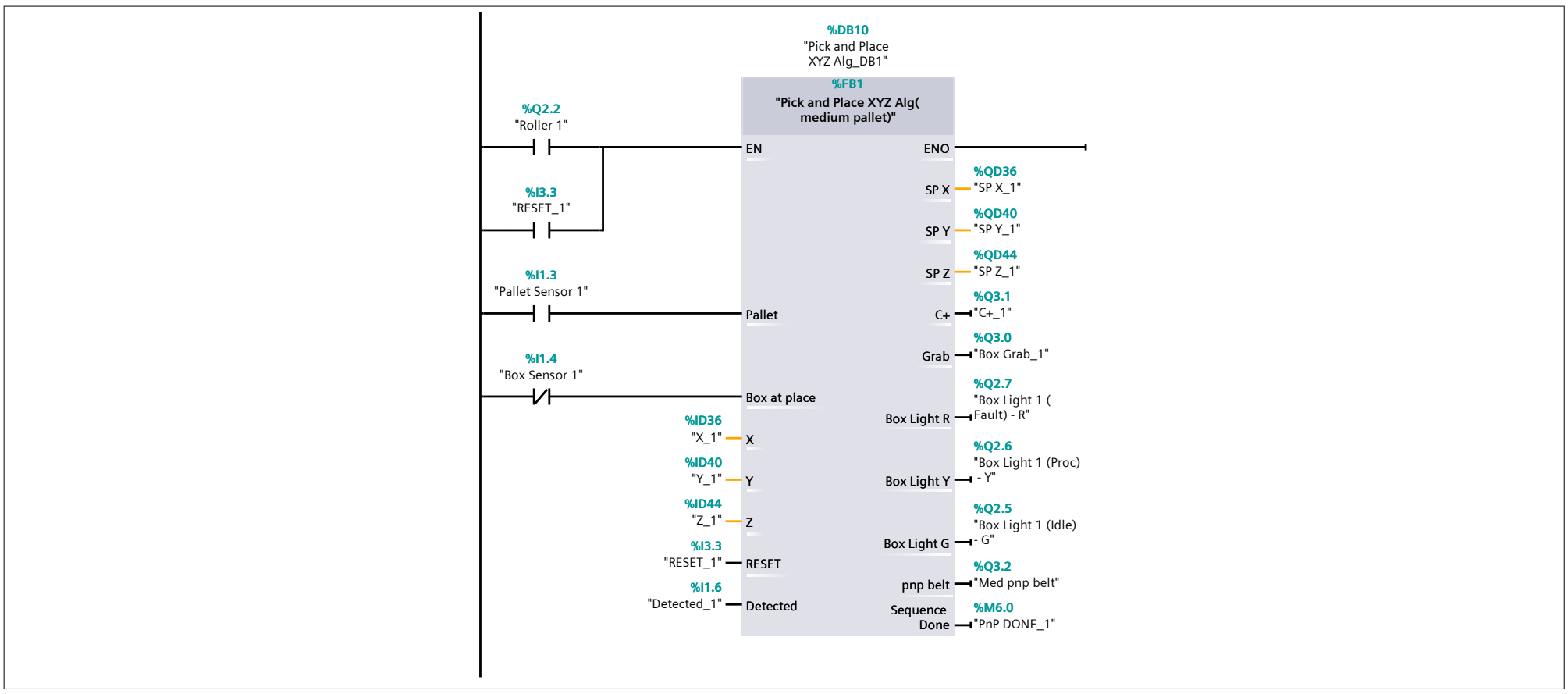

Network 6: Pick and Place XYZ analog 2

Station 2

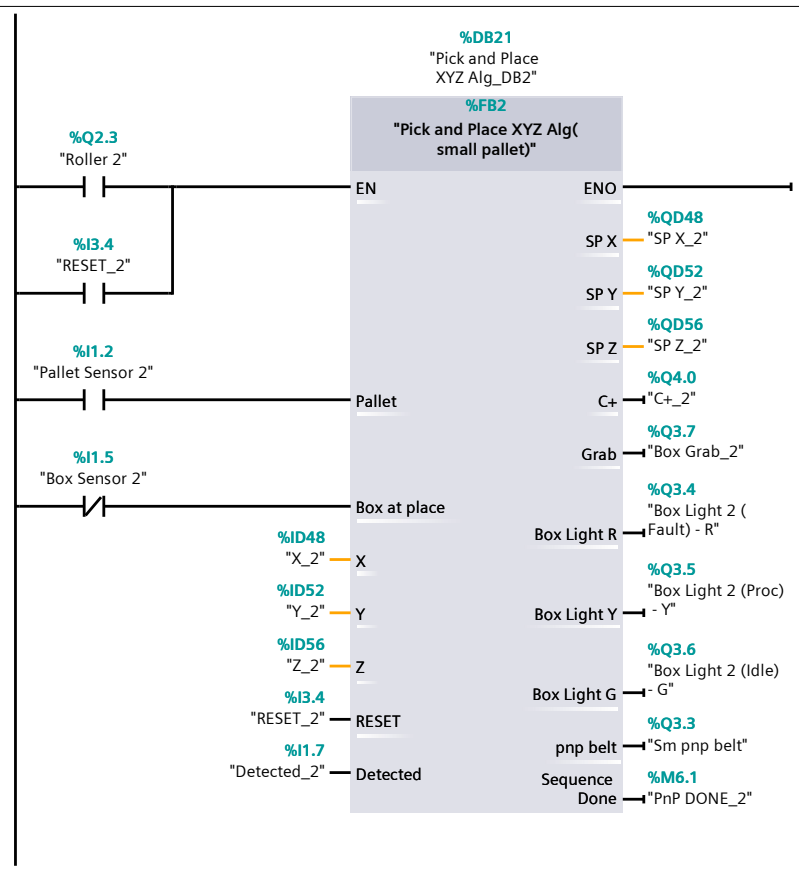

Network 7: Pallet_load

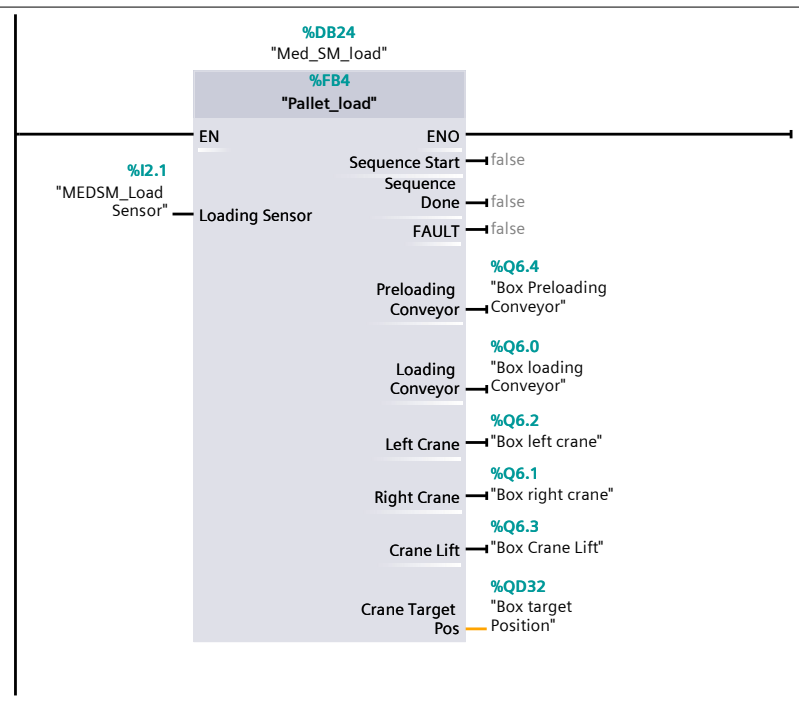

Pallet_load [FB4]

Pallet_load Properties							
General							
Name	Pallet_load	**Number**	4	**Type**	FB	**Language**	LAD
Numbering	Automatic						
Information							
Title		**Author**		**Comment**		**Family**	
Version	0.1	**User-defined ID**					

Name	Data type	Default value	Retain	Accessible from HMI/OPC UA/Web API	Writable from HMI/OPC UA/Web API	Visible in HMI engineering	Setpoint	Supervision	Comment
Input									
Loading Sensor	Bool	false	Non-retain	True	True	True	False		
Output									
Sequence Start	Bool	false	Non-retain	True	True	True	False		
Sequence Done	Bool	false	Non-retain	True	True	True	False		
FAULT	Bool	false	Non-retain	True	True	True	False		
Preloading Conveyor	Bool	false	Non-retain	True	True	True	False		
Loading Conveyor	Bool	false	Non-retain	True	True	True	False		
Left Crane	Bool	false	Non-retain	True	True	True	False		
Right Crane	Bool	false	Non-retain	True	True	True	False		
Crane Lift	Bool	false	Non-retain	True	True	True	False		
Crane Target Pos	DInt	0	Non-retain	True	True	True	False		
InOut									
Static									
Step	DInt	0	Non-retain	True	True	True	False		
Loading Sensor Delay	TON_TIME		Non-retain	True	True	True	False		
PT	Time	T#2s	Non-retain	True	True	True	False		
ET	Time	T#0ms	Non-retain	True	False	True	False		
IN	Bool	false	Non-retain	True	True	True	False		
Q	Bool	false	Non-retain	True	False	True	False		
Loading Delay	TOF_TIME		Non-retain	True	True	True	False		
PT	Time	T#1s	Non-retain	True	True	True	False		
ET	Time	T#0ms	Non-retain	True	False	True	False		
IN	Bool	false	Non-retain	True	True	True	False		
Q	Bool	false	Non-retain	True	False	True	False		
Unloading Delay	TON_TIME		Non-retain	True	True	True	True		
PT	Time	T#2s	Non-retain	True	True	True	False		
ET	Time	T#0ms	Non-retain	True	False	True	False		
IN	Bool	false	Non-retain	True	True	True	False		
Q	Bool	false	Non-retain	True	False	True	False		
Unloading Delay2	TON_TIME		Non-retain	True	True	True	True		
PT	Time	T#1s	Non-retain	True	True	True	False		
ET	Time	T#0ms	Non-retain	True	False	True	False		
IN	Bool	false	Non-retain	True	True	True	False		
Q	Bool	false	Non-retain	True	False	True	False		
Step 2 delay	TON_TIME		Non-retain	True	True	True	True		
PT	Time	T#1s	Non-retain	True	True	True	False		
ET	Time	T#0ms	Non-retain	True	False	True	False		
IN	Bool	false	Non-retain	True	True	True	False		
Q	Bool	false	Non-retain	True	False	True	False		
Step 2 Proc	TON_TIME		Non-retain	True	True	True	True		
PT	Time	T#8s	Non-retain	True	True	True	False		
ET	Time	T#0ms	Non-retain	True	False	True	False		
IN	Bool	false	Non-retain	True	True	True	False		
Q	Bool	false	Non-retain	True	False	True	False		
Crane Reset	TON_TIME		Non-retain	True	True	True	True		
PT	Time	T#2s	Non-retain	True	True	True	False		
ET	Time	T#0ms	Non-retain	True	False	True	False		
IN	Bool	false	Non-retain	True	True	True	False		
Q	Bool	false	Non-retain	True	False	True	False		
Done_cooldown	TON_TIME		Non-retain	True	True	True	True		
PT	Time	T#5s	Non-retain	True	True	True	False		
ET	Time	T#0ms	Non-retain	True	False	True	False		
IN	Bool	false	Non-retain	True	True	True	False		
Q	Bool	false	Non-retain	True	False	True	False		
Dynobit	DInt	0	Non-retain	True	True	True	True		Dynamic DINT for crane control
Pallets_stored	CTU_DINT		Non-retain	True	True	True	False		
CU	Bool	false	Non-retain	True	True	True	False		

Name	Data type	Default value	Retain	Accessible from HMI/OPC UA/Web API	Writable from HMI/OPC UA/Web API	Visible in HMI engineering	Setpoint	Supervision	Comment
CD	Bool	false	Non-retain	True	True	True	False		
R	Bool	false	Non-retain	True	True	True	False		
LD	Bool	false	Non-retain	True	True	True	False		
QU	Bool	false	Non-retain	True	True	True	False		
QD	Bool	false	Non-retain	True	True	True	False		
PV	DInt	54	Non-retain	True	True	True	False		
CV	DInt	0	Non-retain	True	True	True	False		
Temp									
ptrig[0]	Bool								
ptrig[1]	Bool								
ptrig[2]	Bool								
ptrig[3]	Bool								
ptrig[4]	Bool								
ptrig[5]	Bool								
ptrig[6]	Bool								
Constant									

Network 1: Faults

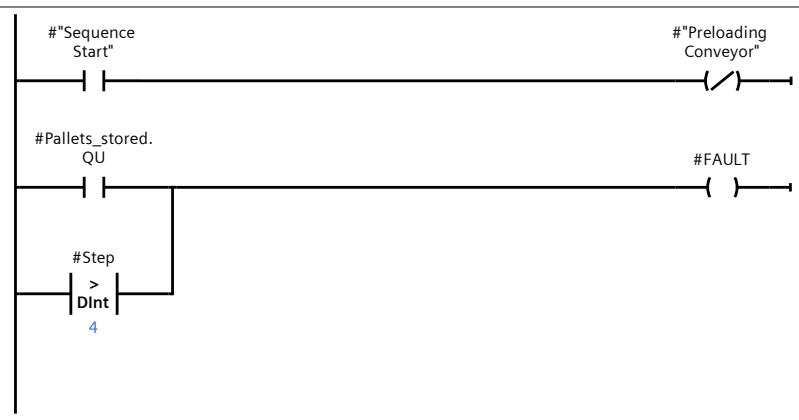

Network 2: Pallet stopper

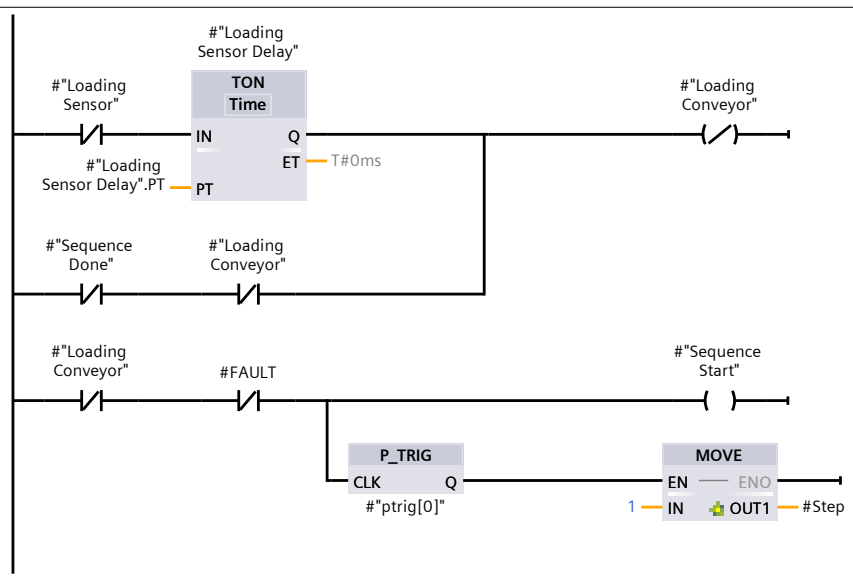

Network 3: Step 1 - Pallet Pick up

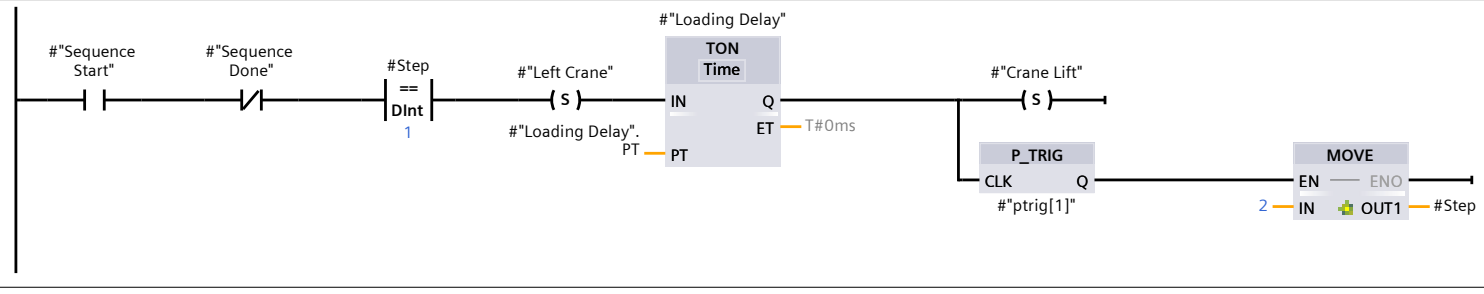

Network 4: Step 2 - Bring pallet to the desired location

Need dynamic move - MATH
Up to 54 slots

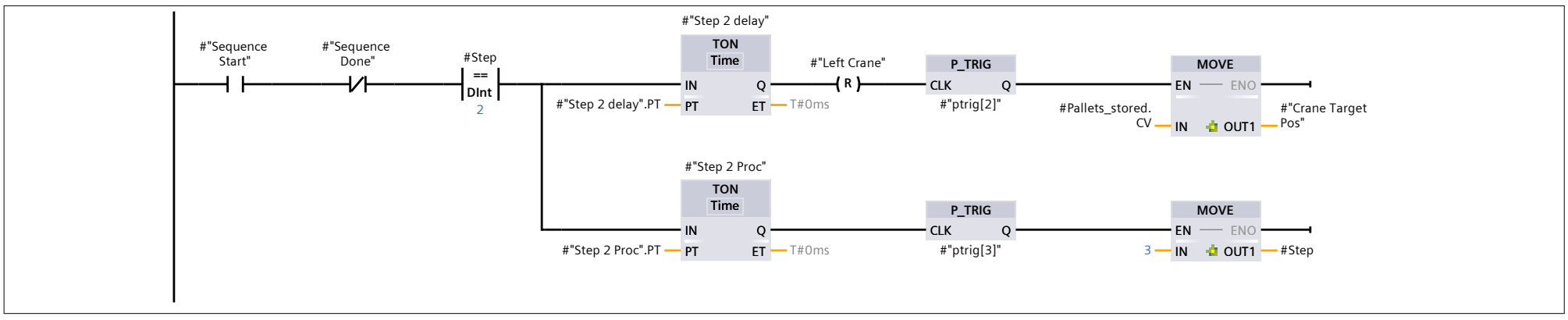

Network 5: Step 3 - Place on the rack

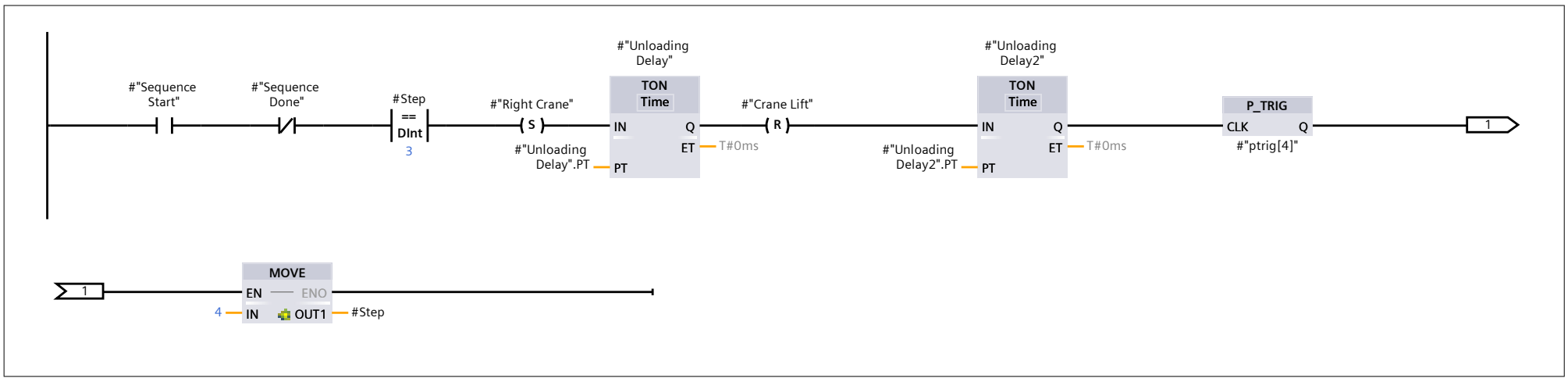

Network 6: Step 4 - Reset crane and go back to the original position

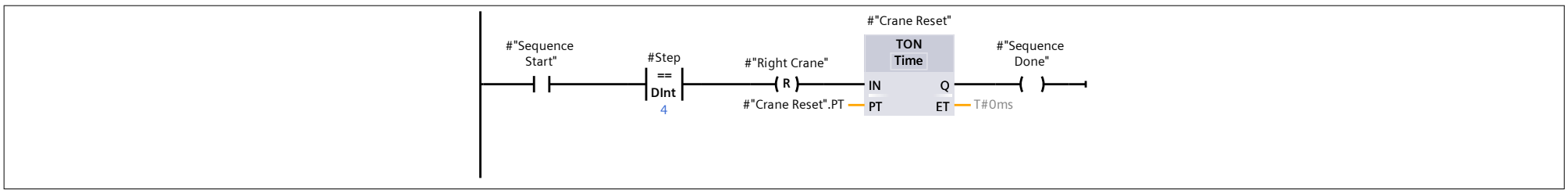

Network 7: DONE

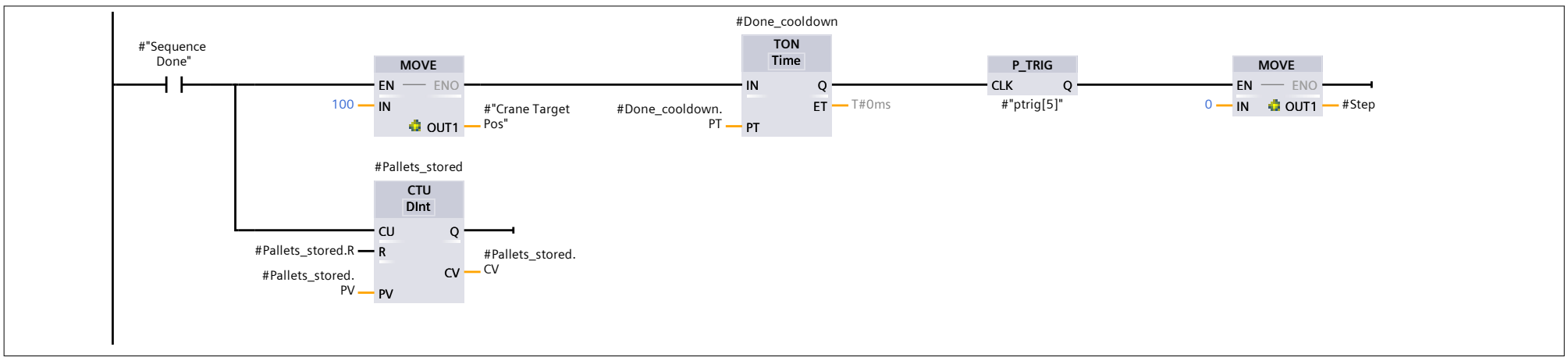

Network 8: Reset counter

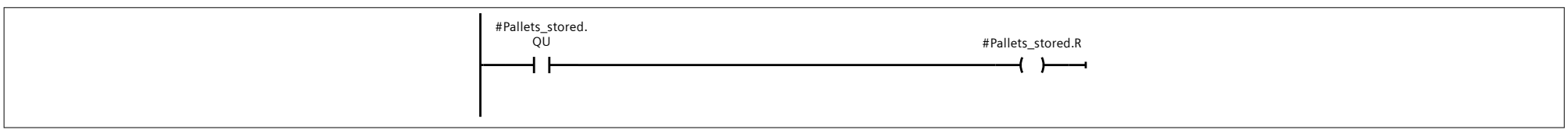

Pallet-stack [FB3]

Pallet-stack Properties							
General							
Name	Pallet-stack	**Number**	3	**Type**	FB	**Language**	LAD
Numbering	Automatic						
Information							
Title		**Author**		**Comment**		**Family**	
Version	0.1	**User-defined ID**					

Name	Data type	Default value	Retain	Accessible from HMI/OPC UA/Web API	Writable from HMI/OPC UA/Web API	Visible in HMI engineering	Setpoint	Supervision	Comment
Input									
RESET	Bool	false	Non-retain	True	True	True	False		
Output									
DONE	Bool	false	Non-retain	True	True	True	False		
Milestone	Bool	false	Non-retain	True	True	True	False		
FAULT	Bool	false	Non-retain	True	True	True	False		
InOut									
Static									
Box Count_V	CTU_INT		Non-retain	True	True	True	False		Vertical Box Counter
CU	Bool	false	Non-retain	True	True	True	False		
CD	Bool	false	Non-retain	True	True	True	False		
R	Bool	false	Non-retain	True	True	True	False		
LD	Bool	false	Non-retain	True	True	True	False		
QU	Bool	false	Non-retain	True	True	True	False		
QD	Bool	false	Non-retain	True	True	True	False		
PV	Int	2	Non-retain	True	True	True	False		
CV	Int	0	Non-retain	True	True	True	False		
Box Count_H	CTU_INT		Non-retain	True	True	True	False		Horizontial Box Counter
CU	Bool	false	Non-retain	True	True	True	False		
CD	Bool	false	Non-retain	True	True	True	False		
R	Bool	false	Non-retain	True	True	True	False		
LD	Bool	false	Non-retain	True	True	True	False		
QU	Bool	false	Non-retain	True	True	True	False		
QD	Bool	false	Non-retain	True	True	True	False		
PV	Int	3	Non-retain	True	True	True	False		
CV	Int	0	Non-retain	True	True	True	False		
Layer	CTU_INT		Non-retain	True	True	True	False		
CU	Bool	false	Non-retain	True	True	True	False		
CD	Bool	false	Non-retain	True	True	True	False		
R	Bool	false	Non-retain	True	True	True	False		
LD	Bool	false	Non-retain	True	True	True	False		
QU	Bool	false	Non-retain	True	True	True	False		
QD	Bool	false	Non-retain	True	True	True	False		
PV	Int	2	Non-retain	True	True	True	False		
CV	Int	0	Non-retain	True	True	True	False		
Vlayer	CTU_INT		Non-retain	True	True	True	False		Side stack(Vertical)
CU	Bool	false	Non-retain	True	True	True	False		
CD	Bool	false	Non-retain	True	True	True	False		
R	Bool	false	Non-retain	True	True	True	False		
LD	Bool	false	Non-retain	True	True	True	False		
QU	Bool	false	Non-retain	True	True	True	False		
QD	Bool	false	Non-retain	True	True	True	False		
PV	Int	3	Non-retain	True	True	True	False		
CV	Int	0	Non-retain	True	True	True	False		
Hlayer	CTU_INT		Non-retain	True	True	True	False		Side stack(Horizontial)
CU	Bool	false	Non-retain	True	True	True	False		
CD	Bool	false	Non-retain	True	True	True	False		
R	Bool	false	Non-retain	True	True	True	False		
LD	Bool	false	Non-retain	True	True	True	False		
QU	Bool	false	Non-retain	True	True	True	False		
QD	Bool	false	Non-retain	True	True	True	False		
PV	Int	2	Non-retain	True	True	True	False		
CV	Int	0	Non-retain	True	True	True	False		
Push_delay	TON_TIME		Retain	True	True	True	True		
PT	Time	T#2s	Retain	True	True	True	False		
ET	Time	T#0ms	Retain	True	False	True	False		
IN	Bool	false	Retain	True	True	True	False		
Q	Bool	false	Retain	True	False	True	False		
Push_delay2	TON_TIME		Non-retain	True	True	True	True		

Name	Data type	Default value	Retain	Accessible from HMI/OPC UA/Web API	Writable from HMI/OPC UA/Web API	Visible in HMI engineering	Setpoint	Supervision	Comment
PT	Time	T#2s	Non-retain	True	True	True	False		
ET	Time	T#0ms	Non-retain	True	False	True	False		
IN	Bool	false	Non-retain	True	True	True	False		
Q	Bool	false	Non-retain	True	False	True	False		
Pallet_Delay	TOF_TIME		Non-retain	True	True	True	False		
PT	Time	T#100ms	Non-retain	True	True	True	False		
ET	Time	T#0ms	Non-retain	True	False	True	False		
IN	Bool	false	Non-retain	True	True	True	False		
Q	Bool	false	Non-retain	True	False	True	False		
Milestone Timer	TON_TIME		Non-retain	True	True	True	True		
PT	Time	T#1s	Non-retain	True	True	True	False		
ET	Time	T#0ms	Non-retain	True	False	True	False		
IN	Bool	false	Non-retain	True	True	True	False		
Q	Bool	false	Non-retain	True	False	True	False		
Milestone Timer_1	TON_TIME		Non-retain	True	True	True	True		
PT	Time	T#0.5s	Non-retain	True	True	True	False		
ET	Time	T#0ms	Non-retain	True	False	True	False		
IN	Bool	false	Non-retain	True	True	True	False		
Q	Bool	false	Non-retain	True	False	True	False		
Reset_delay_1	TON_TIME		Non-retain	True	True	True	True		
PT	Time	T#1s	Non-retain	True	True	True	False		
ET	Time	T#0ms	Non-retain	True	False	True	False		
IN	Bool	false	Non-retain	True	True	True	False		
Q	Bool	false	Non-retain	True	False	True	False		
Reset_delay_2	TON_TIME		Non-retain	True	True	True	True		
PT	Time	T#2s	Non-retain	True	True	True	False		
ET	Time	T#0ms	Non-retain	True	False	True	False		
IN	Bool	false	Non-retain	True	True	True	False		
Q	Bool	false	Non-retain	True	False	True	False		
Done_delay	TON_TIME		Non-retain	True	True	True	True		
PT	Time	T#4s	Non-retain	True	True	True	False		
ET	Time	T#0ms	Non-retain	True	False	True	False		
IN	Bool	false	Non-retain	True	True	True	False		
Q	Bool	false	Non-retain	True	False	True	False		
Done_trig_delay	TON_TIME		Non-retain	True	True	True	True		
PT	Time	T#700ms	Non-retain	True	True	True	False		
ET	Time	T#0ms	Non-retain	True	False	True	False		
IN	Bool	false	Non-retain	True	True	True	False		
Q	Bool	false	Non-retain	True	False	True	False		
Pallet_box_delay	TON_TIME		Non-retain	True	True	True	True		
PT	Time	T#5s	Non-retain	True	True	True	False		
ET	Time	T#0ms	Non-retain	True	False	True	False		
IN	Bool	false	Non-retain	True	True	True	False		
Q	Bool	false	Non-retain	True	False	True	False		
Temp									
ptrig[1]	Bool								
ptrig[2]	Bool								
ptrig[3]	Bool								
Constant									

Network 1: Pre-Pallet

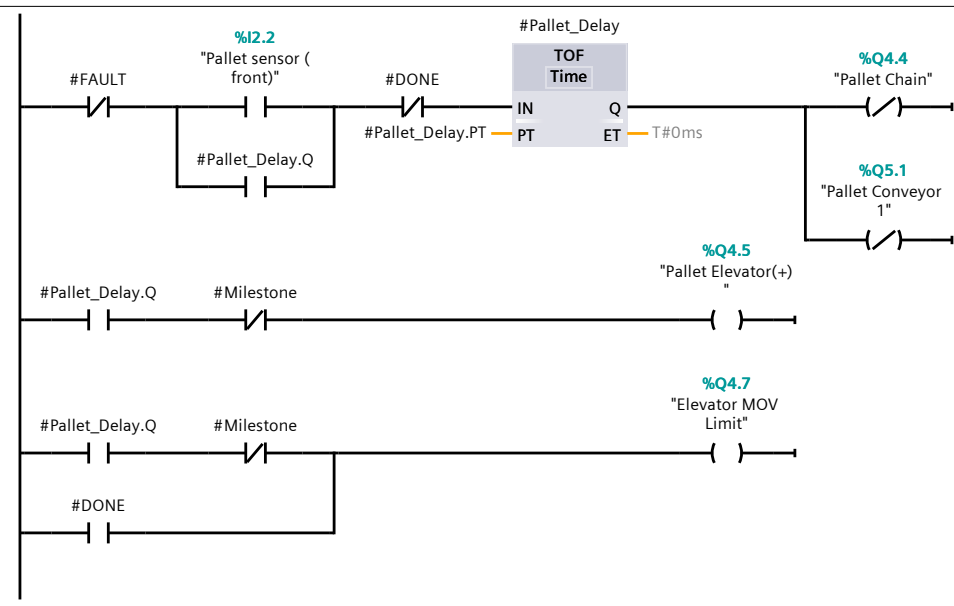

Network 2: Vertical and Horizontal Stacking

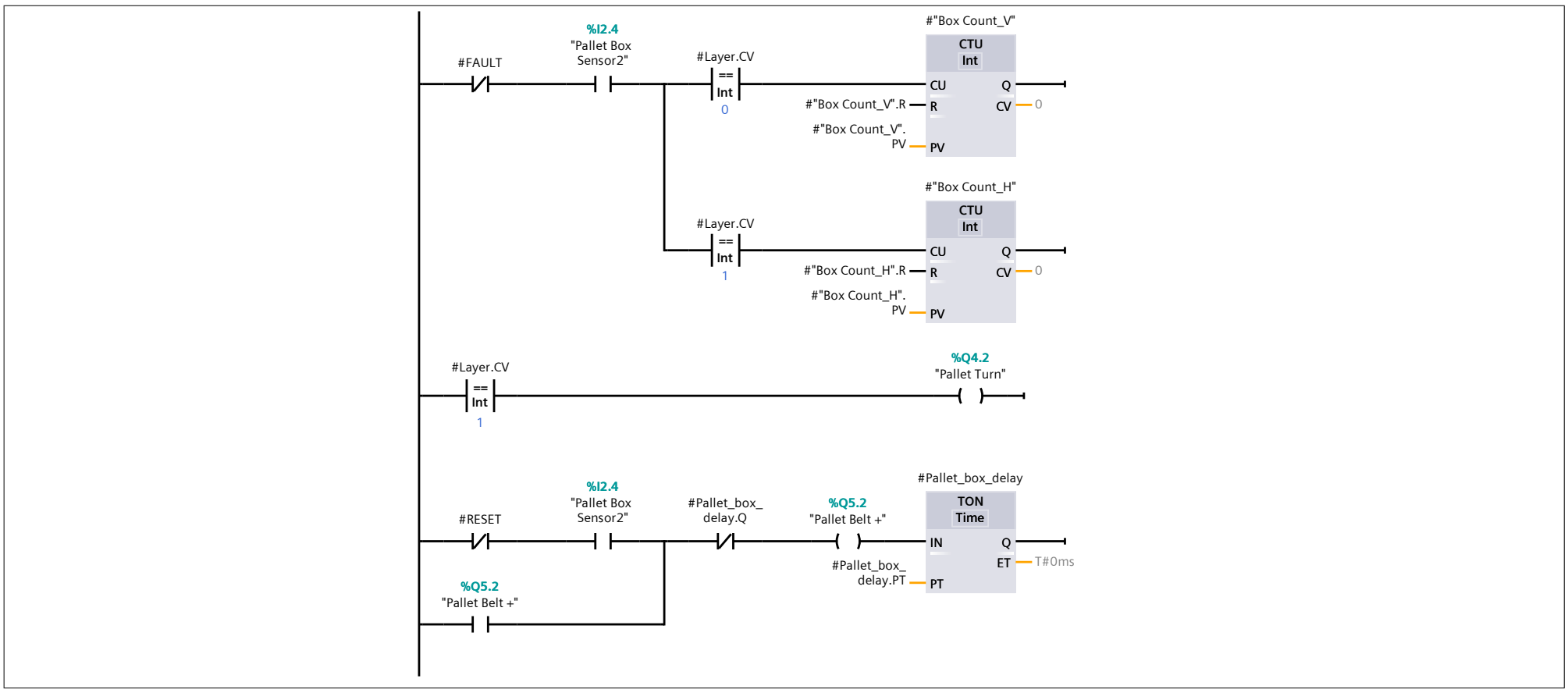

Network 3: Pallet pusher

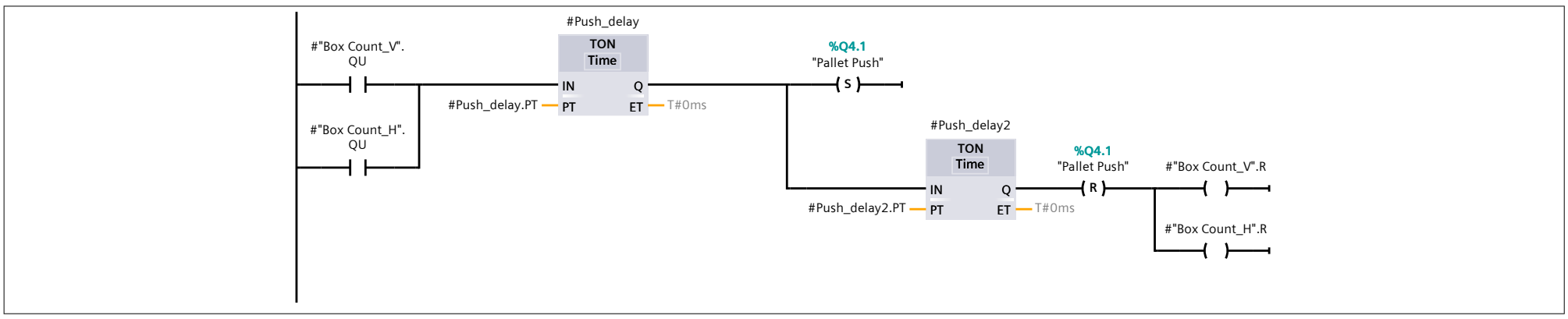

Network 4: Side Stack Counter

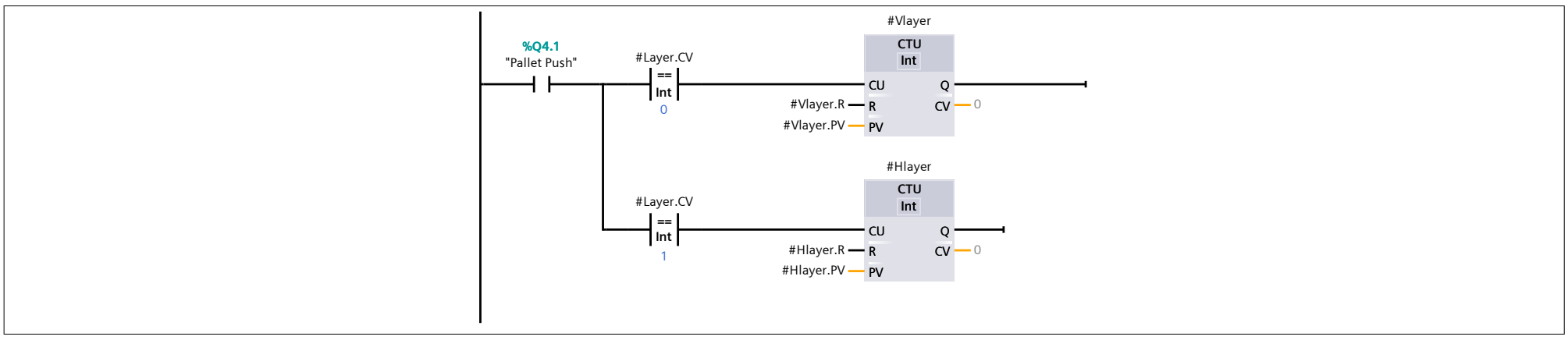

Network 5: Pallet transfer

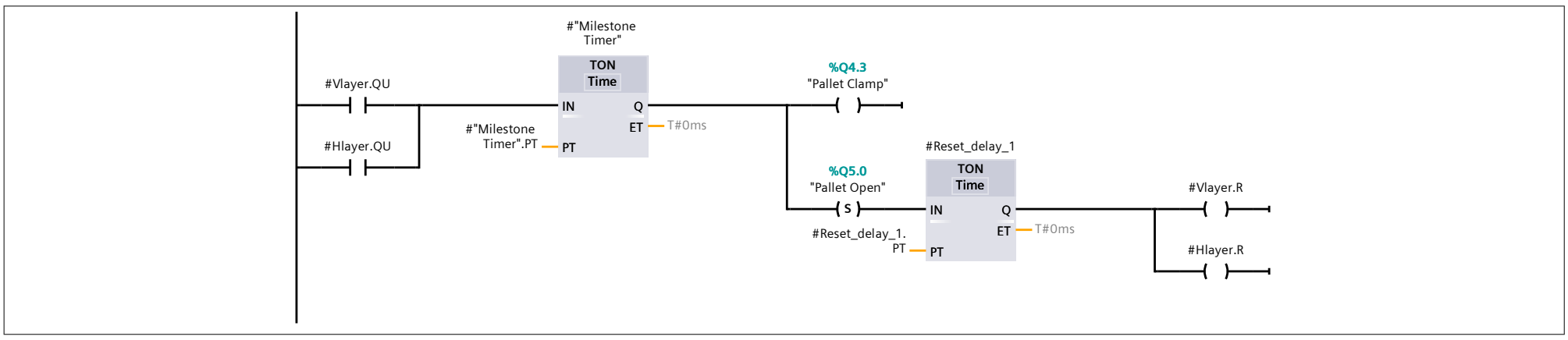

Network 6: Milestone

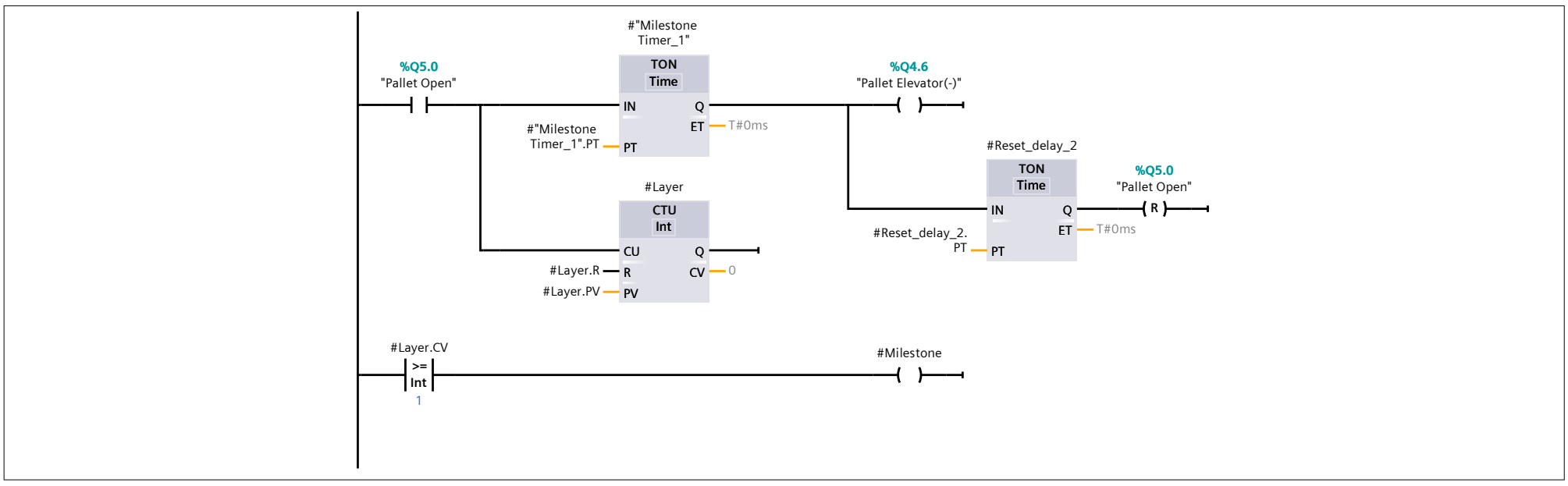

Network 7: DONE

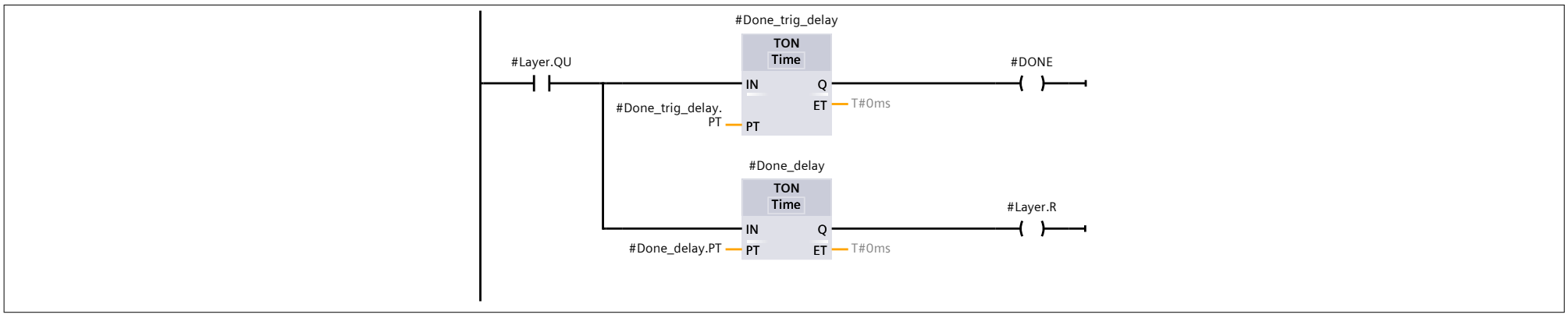

Network 8: FAULT

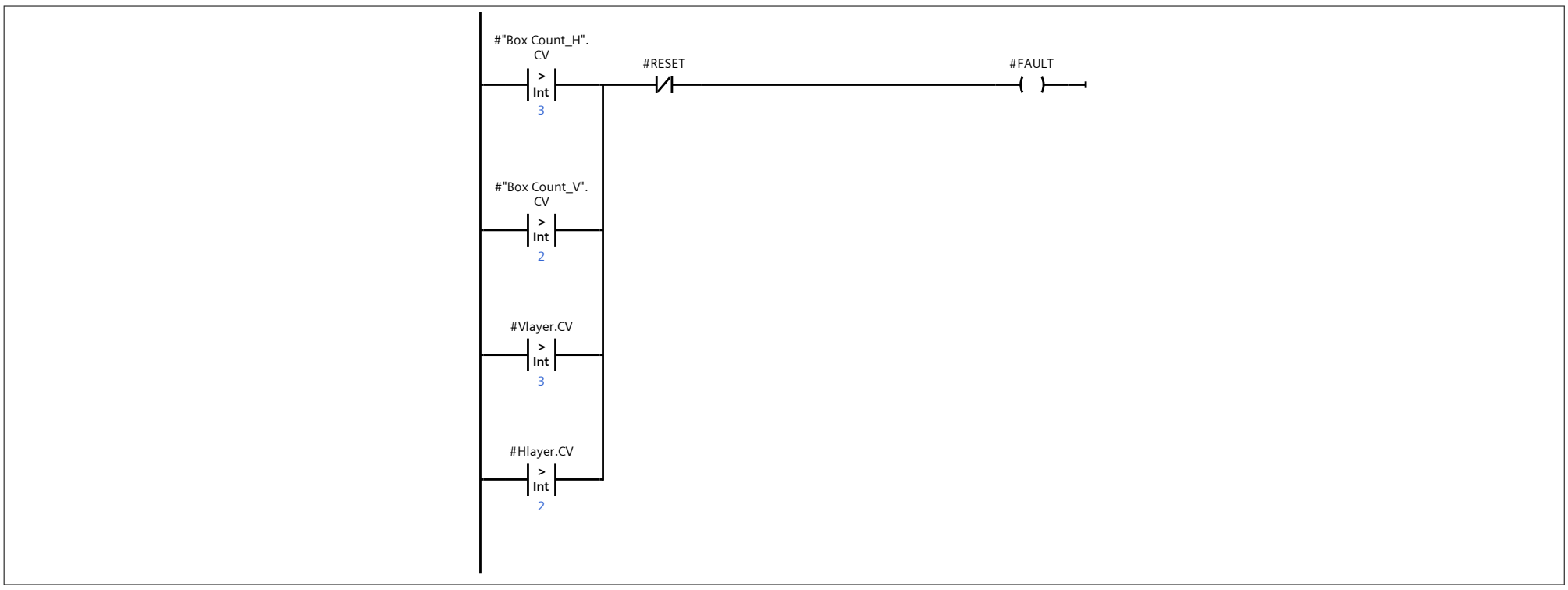

Pick and Place XYZ Alg(medium pallet) [FB1]

Pick and Place XYZ Alg(medium pallet) Properties							
General							
Name	Pick and Place XYZ Alg(medium pallet)	**Number**	1	**Type**	FB	**Language**	LAD
Numbering	Automatic						
Information							
Title		**Author**		**Comment**		**Family**	
Version	0.1	**User-defined ID**					

Name	Data type	Default value	Retain	Accessible from HMI/OPC UA/Web API	Writable from HMI/OPC UA/Web API	Visible in HMI engineering	Setpoint	Supervision	Comment
Input									
Pallet	Bool	false	Non-retain	True	True	True	False		
Box at place	Bool	false	Non-retain	True	True	True	False		
X	Real	0.0	Non-retain	True	True	True	False		
Y	Real	0.0	Non-retain	True	True	True	False		
Z	Real	0.0	Non-retain	True	True	True	False		
RESET	Bool	false	Non-retain	True	True	True	False		
Detected	Bool	false	Non-retain	True	True	True	False		
Output									
SP X	Real	0.0	Retain	True	True	True	False		
SP Y	Real	0.0	Retain	True	True	True	False		
SP Z	Real	0.0	Retain	True	True	True	False		
C+	Bool	false	Non-retain	True	True	True	False		
Grab	Bool	false	Non-retain	True	True	True	False		
Box Light R	Bool	false	Non-retain	True	True	True	False		
Box Light Y	Bool	false	Non-retain	True	True	True	False		
Box Light G	Bool	false	Non-retain	True	True	True	False		
pnp belt	Bool	false	Non-retain	True	True	True	False		
Sequence Done	Bool	false	Non-retain	True	True	True	False		
InOut									
Static									
C Limit	DInt	0	Non-retain	True	True	True	False		
FAULT	Bool	false	Non-retain	True	True	True	False		
Step	DInt	0	Non-retain	True	True	True	False		
Sequence Active	Bool	false	Non-retain	True	True	True	False		
ptrig[00]	Bool	false	Non-retain	False	False	False	False		
ptrig[0]	Bool	false	Non-retain	False	False	False	False		
ptrig[1]	Bool	false	Non-retain	False	False	False	False		
ptrig[2]	Bool	false	Non-retain	False	False	False	False		
ptrig[3]	Bool	false	Non-retain	False	False	False	False		
ptrig[4]	Bool	false	Non-retain	False	False	False	False		
ptrig[5]	Bool	false	Non-retain	False	False	False	False		
ptrig[6]	Bool	false	Non-retain	False	False	False	False		
ptrig[7]	Bool	false	Non-retain	False	False	False	False		
ptrig[8]	Bool	false	Non-retain	False	False	False	False		
ptrig[9]	Bool	false	Non-retain	False	False	False	False		
ptrig[10]	Bool	false	Non-retain	False	False	False	False		
ptrig[11]	Bool	false	Non-retain	False	False	False	False		
ptrig[12]	Bool	false	Non-retain	False	False	False	False		
ptrig[13]	Bool	false	Non-retain	False	False	False	False		
ptrig[14]	Bool	false	Non-retain	False	False	False	False		
ptrig[15]	Bool	false	Non-retain	False	False	False	False		
ptrig[16]	Bool	false	Non-retain	False	False	False	False		
ptrig[17]	Bool	false	Non-retain	False	False	False	False		
ptrig[18]	Bool	false	Non-retain	True	True	True	False		
ptrig[19]	Bool	false	Non-retain	True	True	True	False		
ptrig[20]	Bool	false	Non-retain	True	True	True	False		
ptrig[21]	Bool	false	Non-retain	True	True	True	False		
ptrig[22]	Bool	false	Non-retain	True	True	True	False		
Pnp Grab Delay	TON_TIME		Non-retain	True	True	True	True		
PT	Time	T#1s	Non-retain	True	True	True	False		
ET	Time	T#0ms	Non-retain	True	False	True	False		
IN	Bool	false	Non-retain	True	True	True	False		
Q	Bool	false	Non-retain	True	False	True	False		
Pnp Grab Delay2	TON_TIME		Non-retain	True	True	True	True		
PT	Time	T#1s	Non-retain	True	True	True	False		
ET	Time	T#0ms	Non-retain	True	False	True	False		
IN	Bool	false	Non-retain	True	True	True	False		
Q	Bool	false	Non-retain	True	False	True	False		

Name	Data type	Default value	Retain	Accessible from HMI/OPC UA/Web API	Writable from HMI/OPC UA/Web API	Visible in HMI engineering	Setpoint	Supervision	Comment
Pnp Grab Delay3	TON_TIME		Non-retain	True	True	True	True		
PT	Time	T#1s	Non-retain	True	True	True	False		
ET	Time	T#0ms	Non-retain	True	False	True	False		
IN	Bool	false	Non-retain	True	True	True	False		
Q	Bool	false	Non-retain	True	False	True	False		
Temp									
Constant									

Network 1: Fault

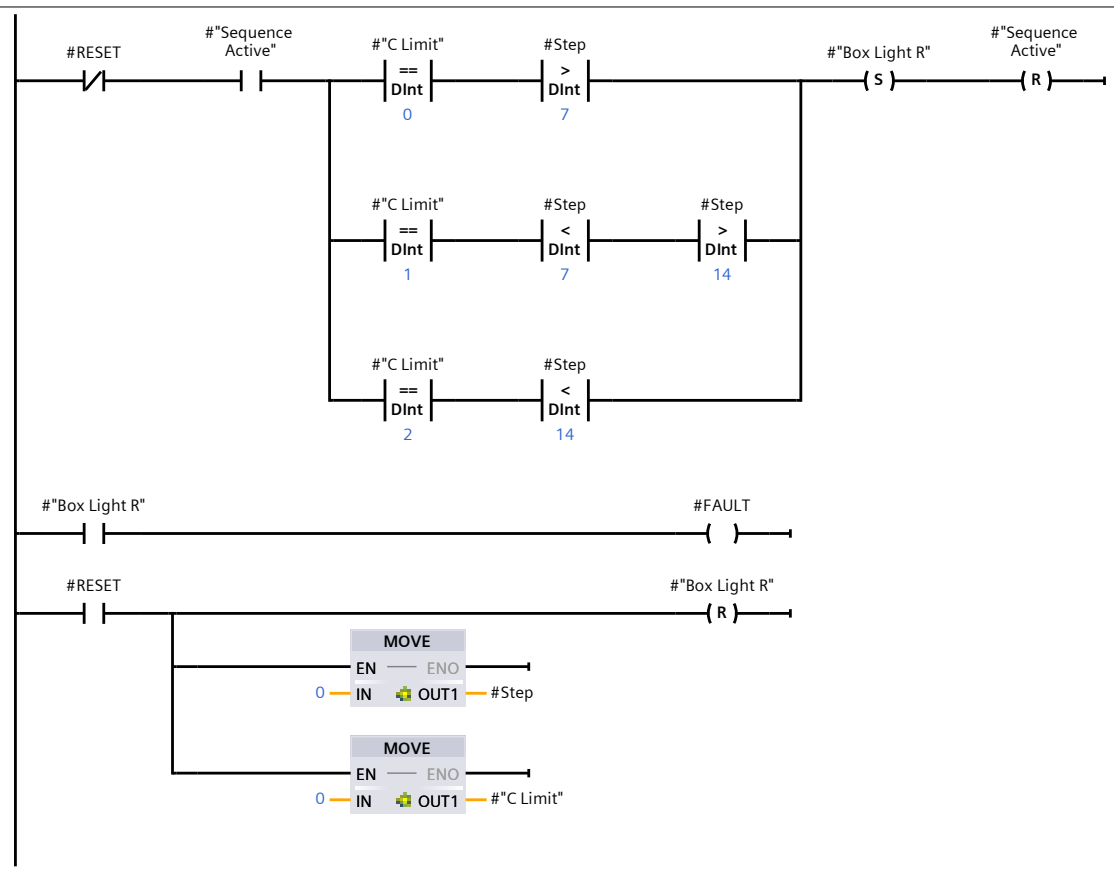

Network 2: Sequence Done

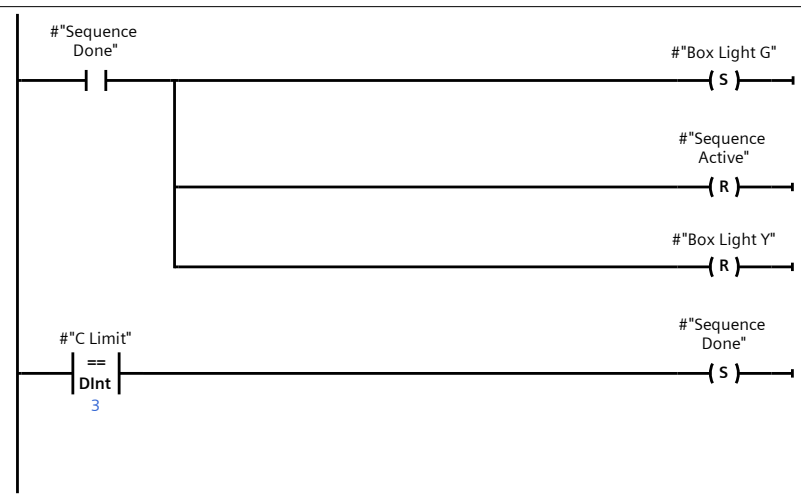

Network 3: Idle(reworked)

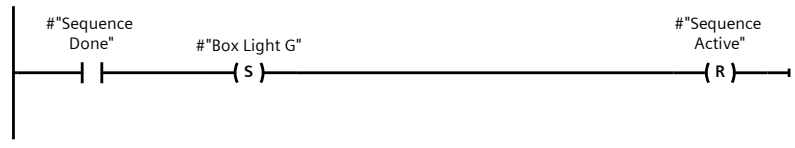

Network 4: Step 0 - Sequence Activiation

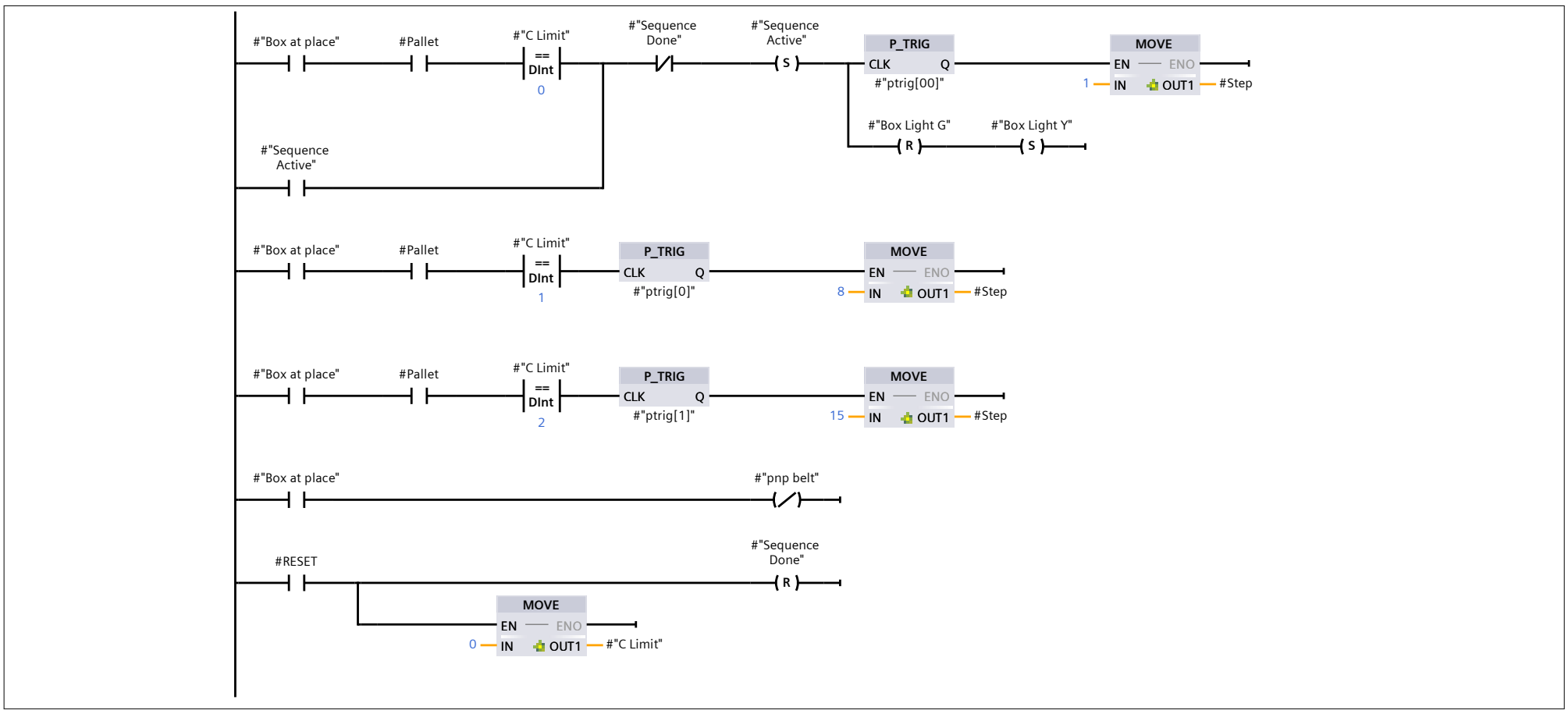

Network 5: Step 1 - Move arm to item position

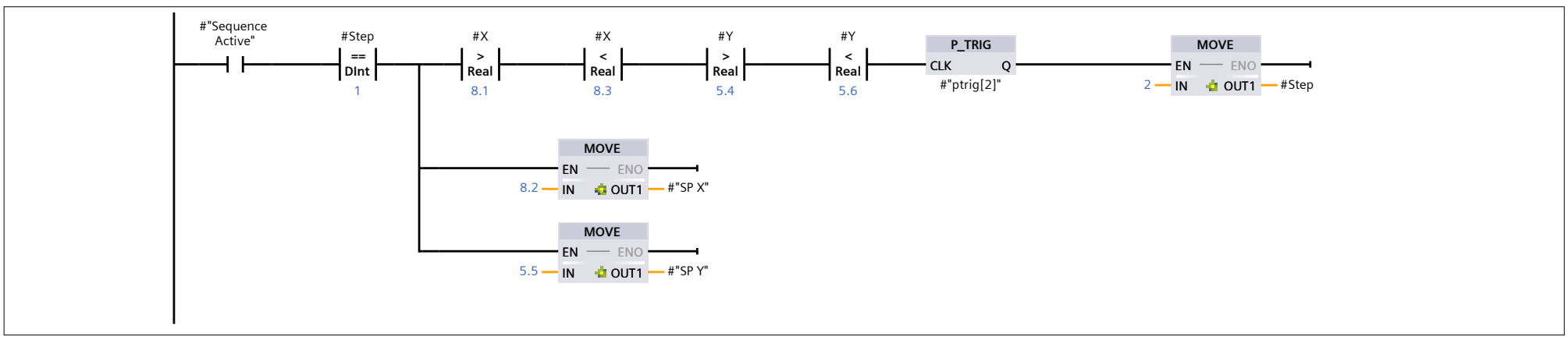

Network 6: Step 2 - Move arm down to item position

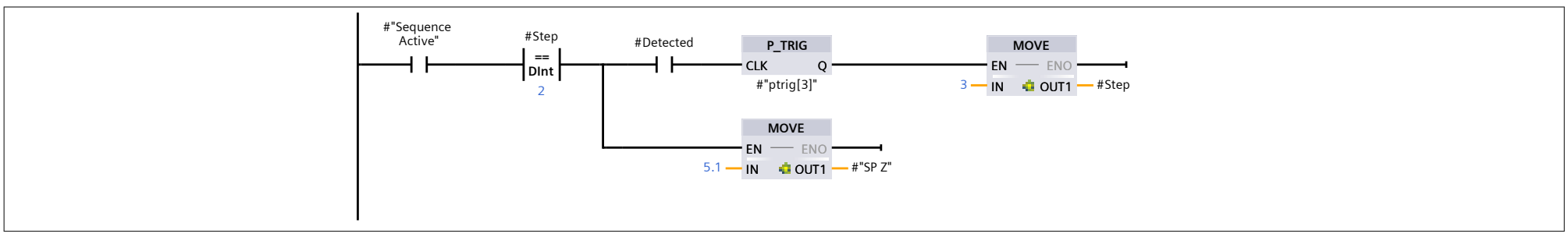

Network 7: Step 3 - Grab item

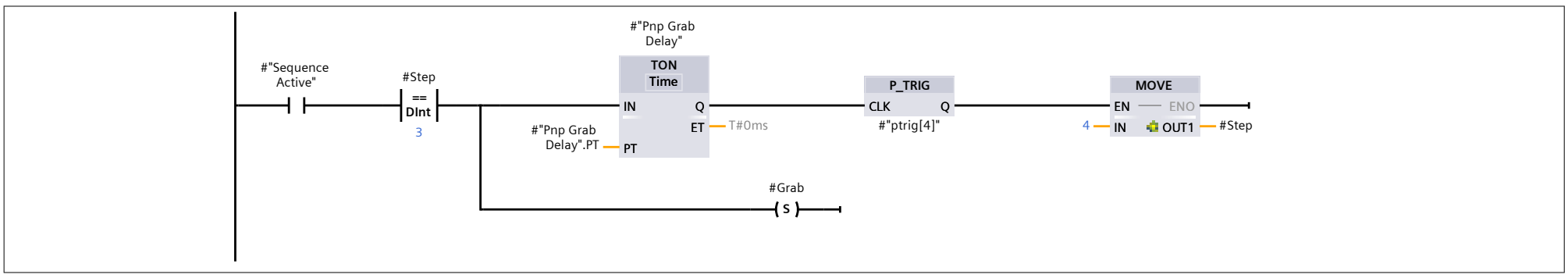

Network 8: Step 4 - Move arm up

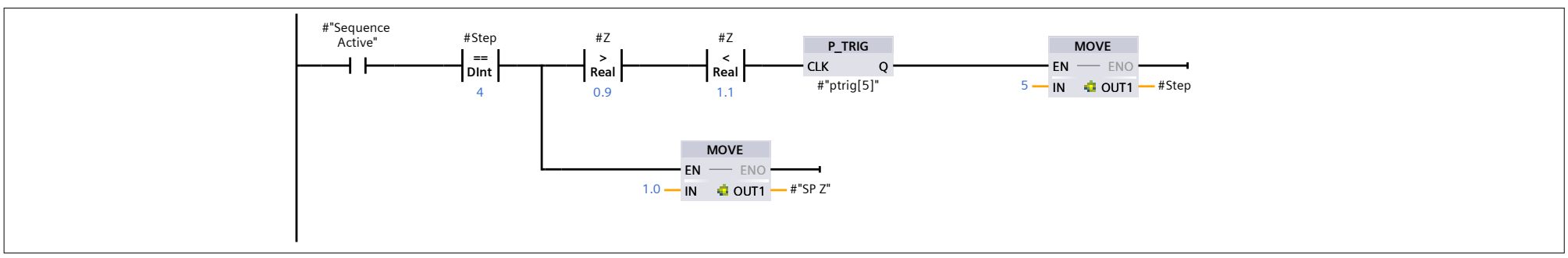

Network 9: Step 5 - Move arm to pallet position 1

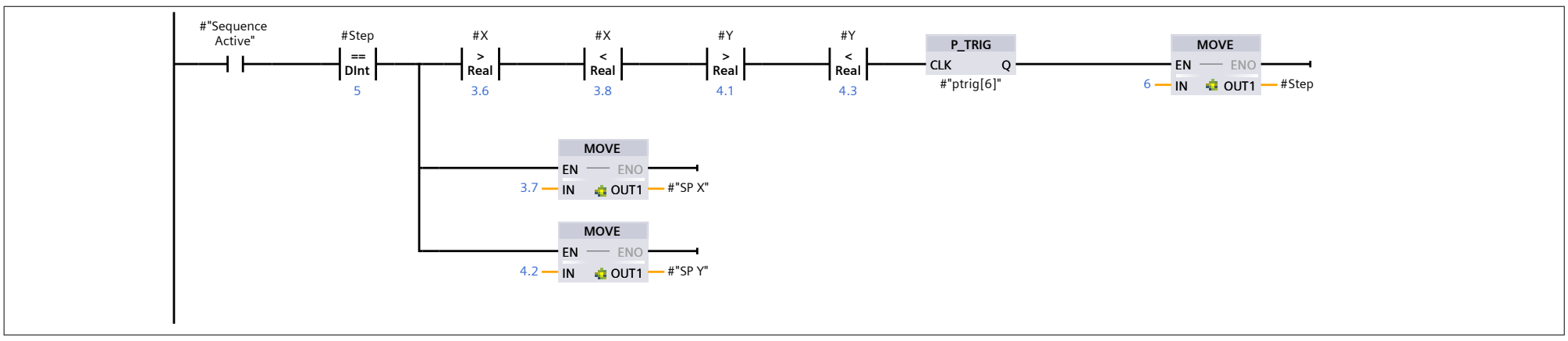

Network 10: Step 6 - Move arm down to pallet position

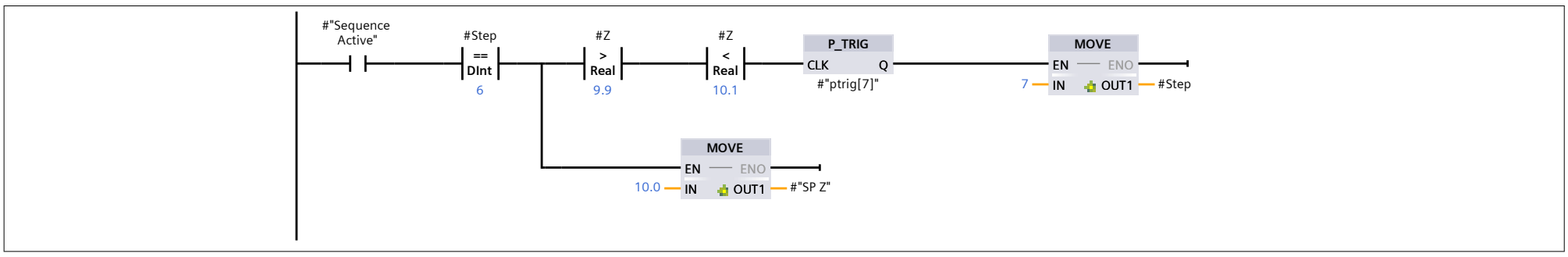

Network 11: Step 7 - Release Grab & Move Arm up

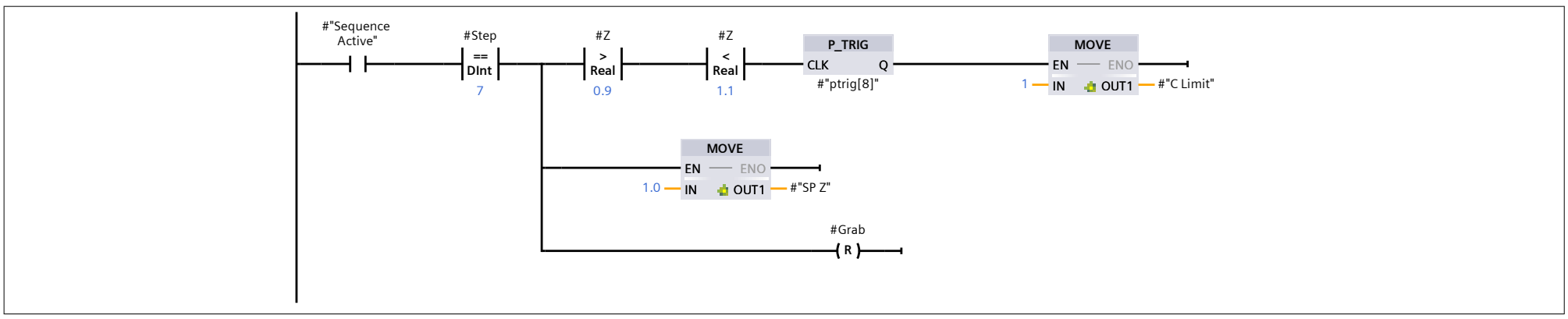

Network 12: Step 8 - Move arm to item position

Repeats step 1-7 (with different XY coordinates)

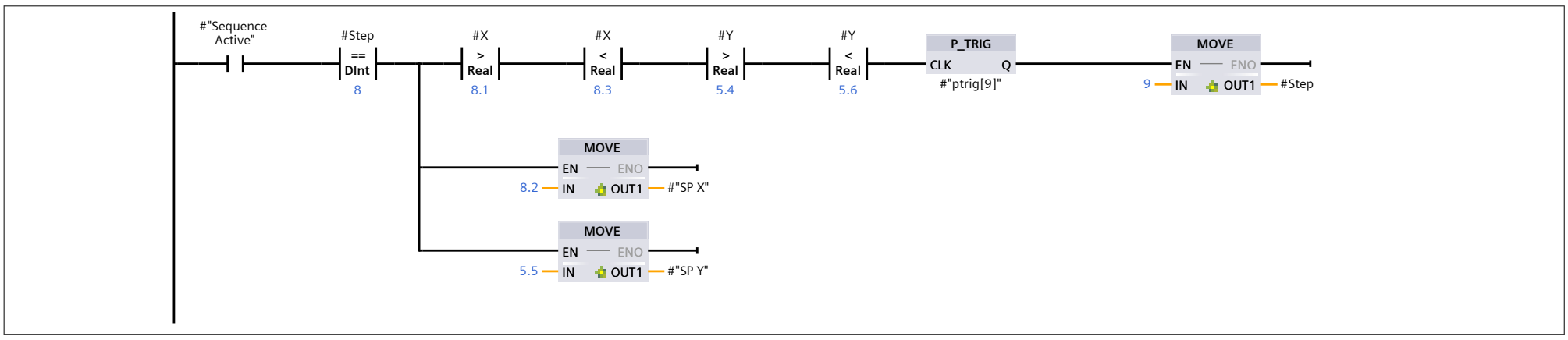

Network 13: Step 9 - Move arm down to item position

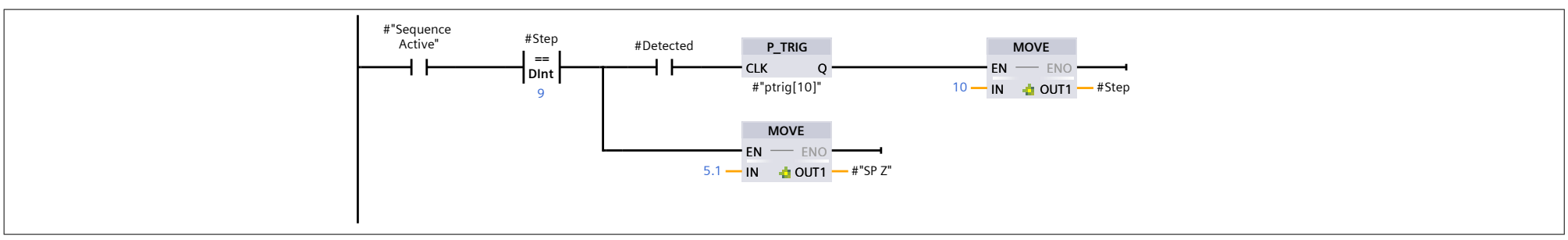

Network 14: Step 10 - Grab item

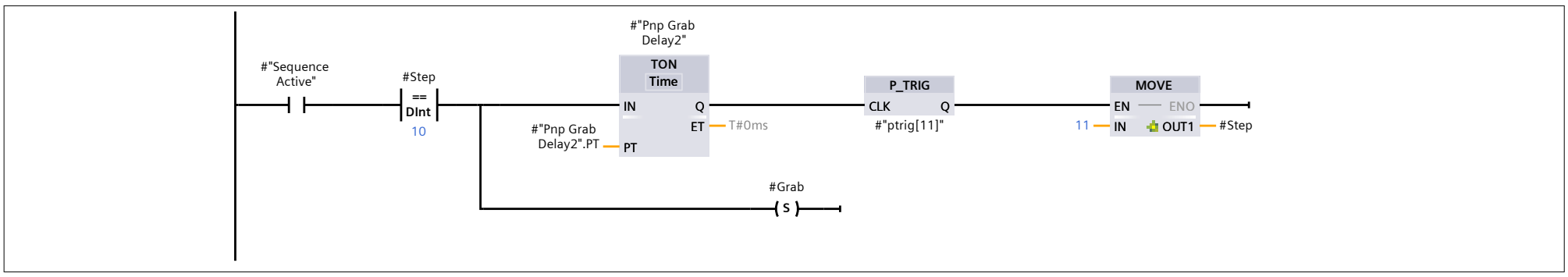

Network 15: Step 11 - Move arm up

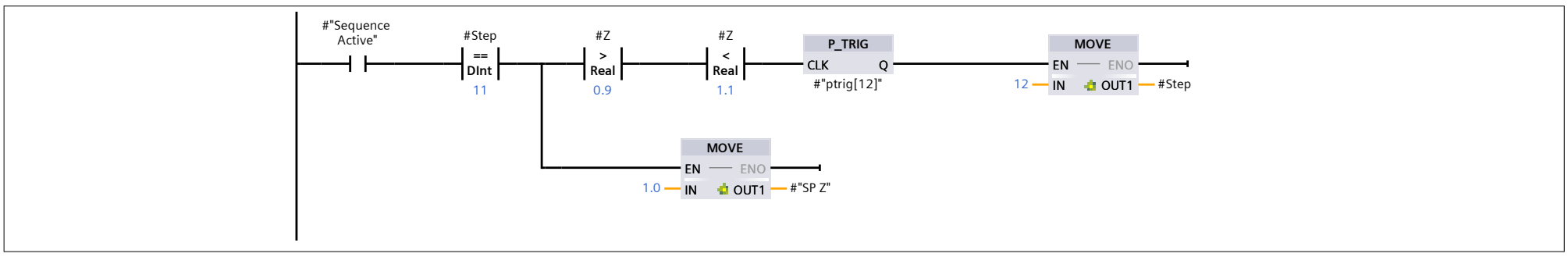

Network 16: Step 12 - Move arm to pallet position 2

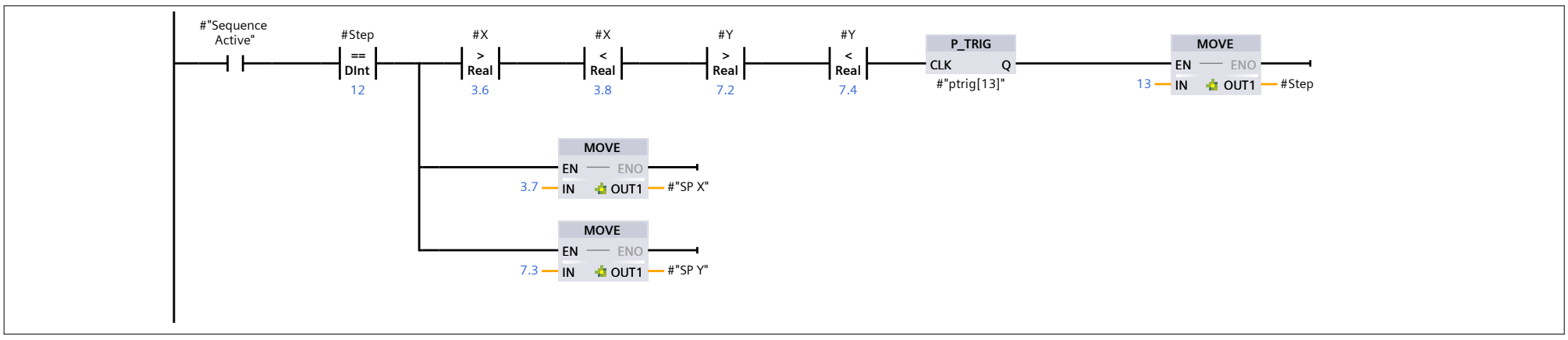

Network 17: Step 13 - Move arm down to pallet position

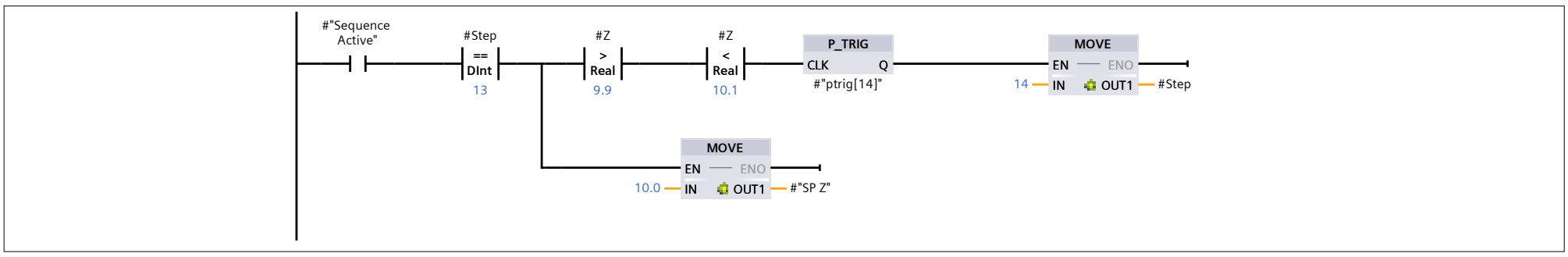

Network 18: Step 14 - Release Grab & Move arm up

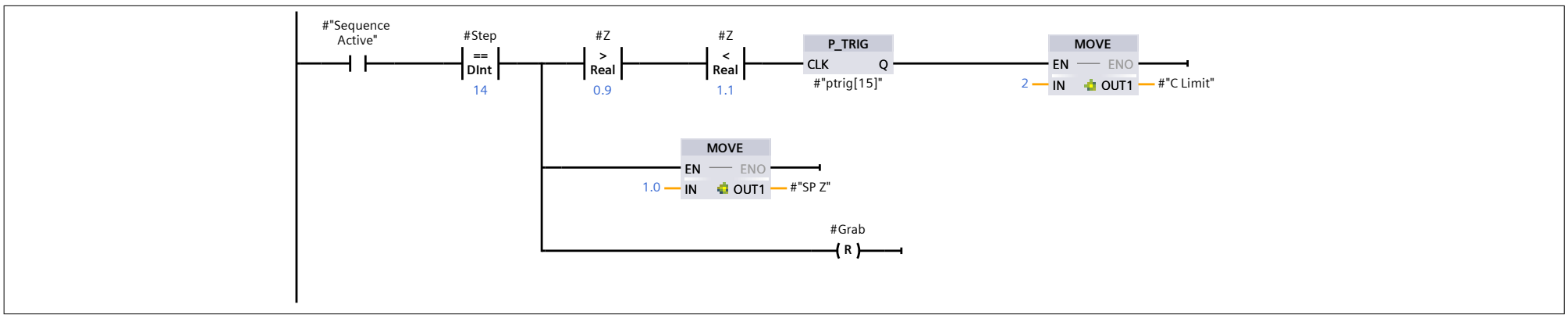

Network 19: Step 15 - Move arm to item position

Repeats step 8-14 (with different XY coordinates)

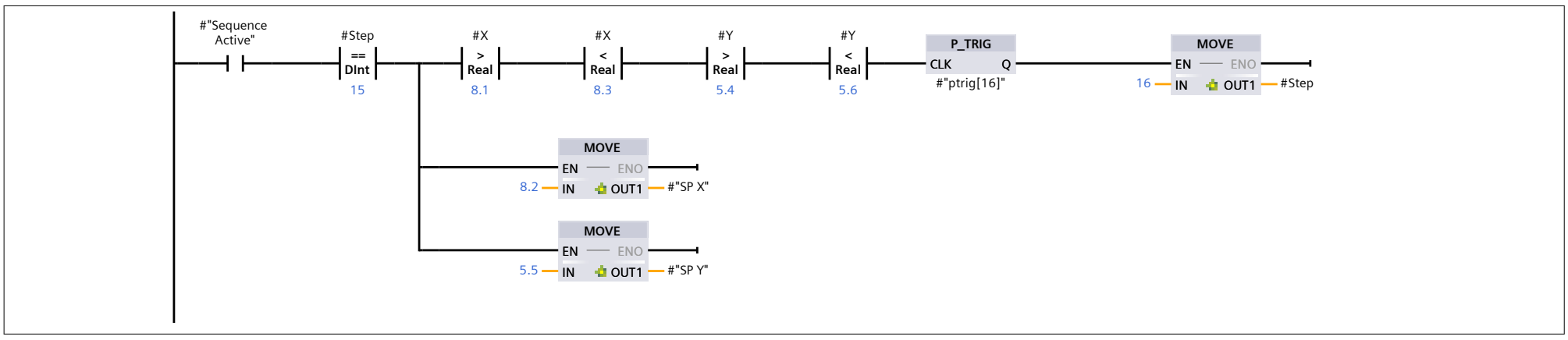

Network 20: Step 16 - Move arm down to item position

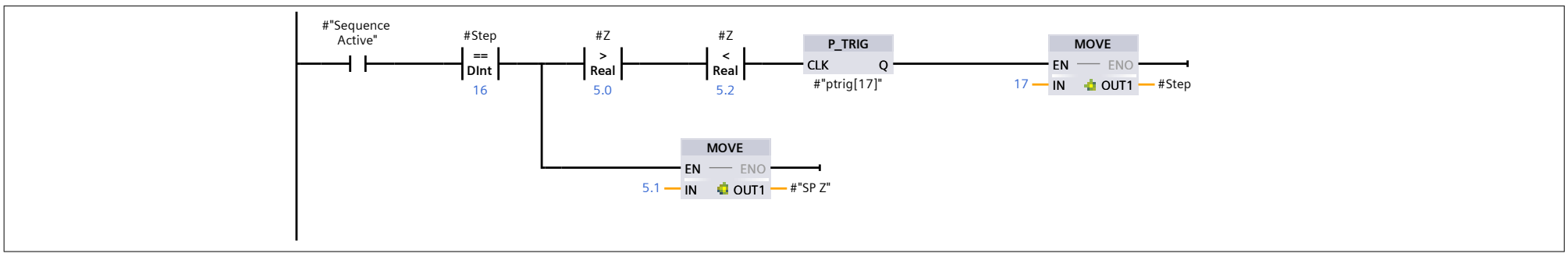

Network 21: Step 17 - Grab item

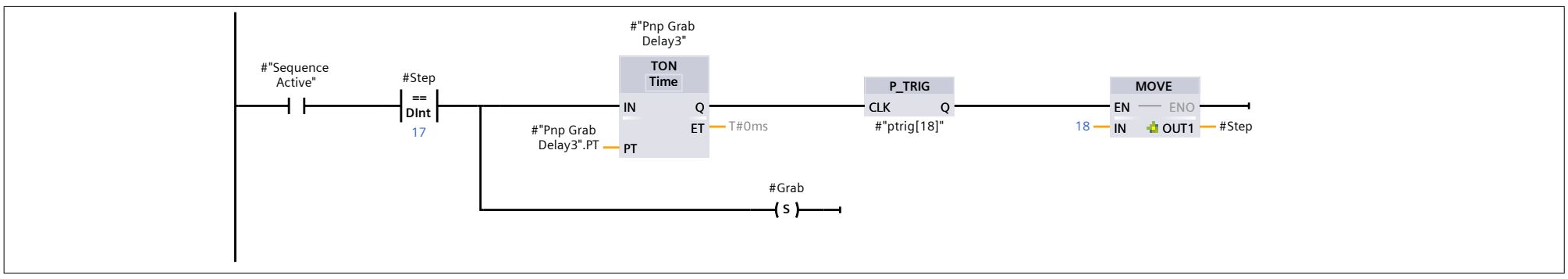

Network 22: Step 18 - Move arm up

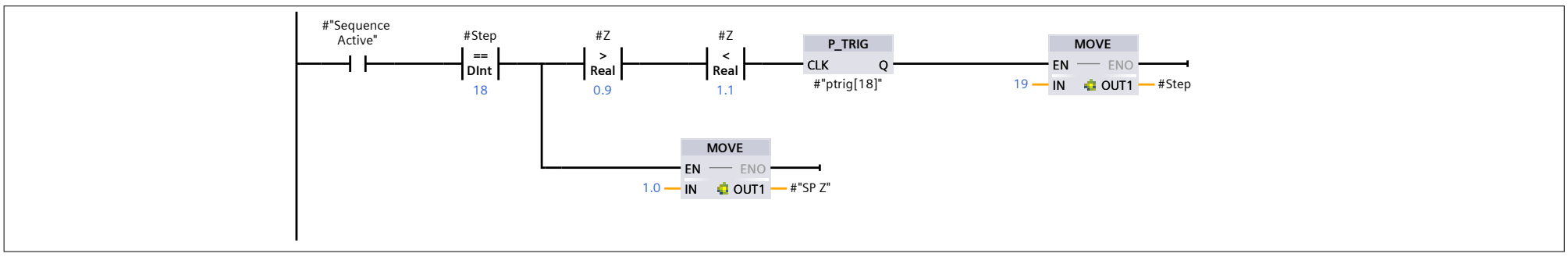

Network 23: Step 19 - Move arm to pallet position 3 (+rotate)

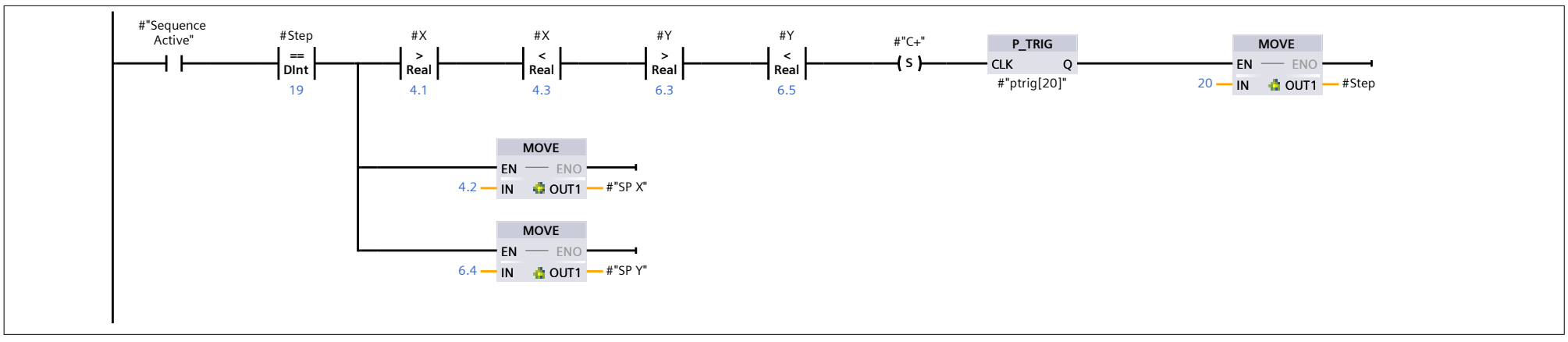

Network 24: Step 20 - Move arm down to pallet position

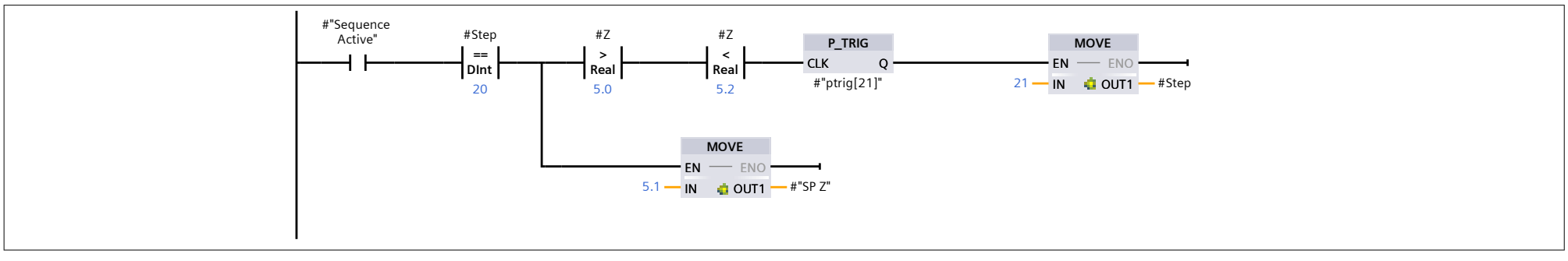

Network 25: Step 21 - Release Grab & Move Arm up

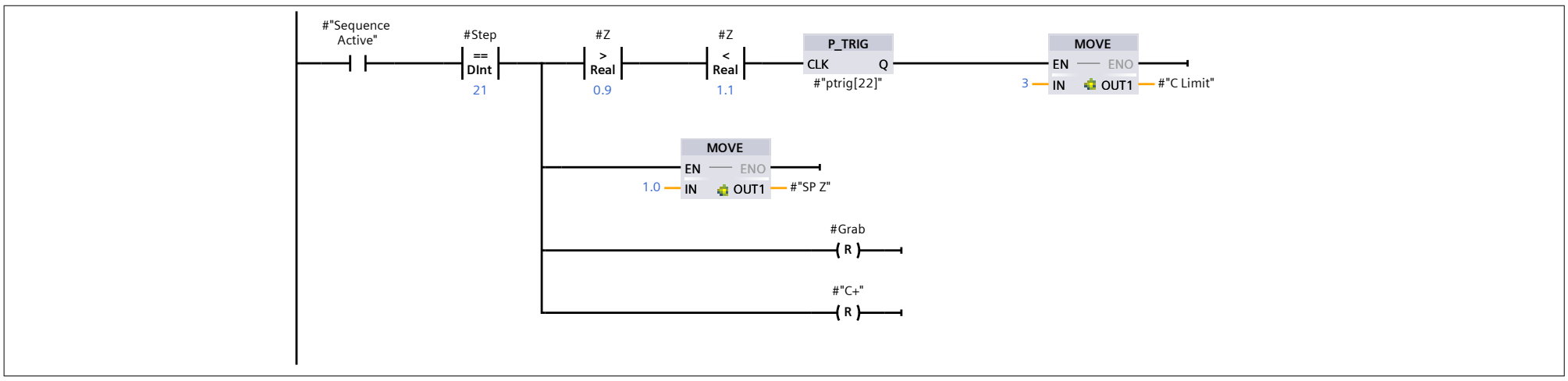

Pick and Place XYZ Alg(small pallet) [FB2]

Pick and Place XYZ Alg(small pallet) Properties							
General							
Name	Pick and Place XYZ Alg(small pallet)	**Number**	2	**Type**	FB	**Language**	LAD
Numbering	Automatic						
Information							
Title		**Author**		**Comment**		**Family**	
Version	0.1	**User-defined ID**					

Name	Data type	Default value	Retain	Accessible from HMI/OPC UA/Web API	Writable from HMI/OPC UA/Web API	Visible in HMI engineering	Setpoint	Supervision	Comment
Input									
Pallet	Bool	false	Non-retain	True	True	True	False		
Box at place	Bool	false	Non-retain	True	True	True	False		
X	Real	0.0	Non-retain	True	True	True	False		
Y	Real	0.0	Non-retain	True	True	True	False		
Z	Real	0.0	Non-retain	True	True	True	False		
RESET	Bool	false	Non-retain	True	True	True	False		
Detected	Bool	false	Non-retain	True	True	True	False		
Output									
SP X	Real	0.0	Non-retain	True	True	True	False		
SP Y	Real	0.0	Non-retain	True	True	True	False		
SP Z	Real	0.0	Non-retain	True	True	True	False		
C+	Bool	false	Non-retain	True	True	True	False		
Grab	Bool	false	Non-retain	True	True	True	False		
Box Light R	Bool	false	Non-retain	True	True	True	False		
Box Light Y	Bool	false	Non-retain	True	True	True	False		
Box Light G	Bool	false	Non-retain	True	True	True	False		
pnp belt	Bool	false	Non-retain	True	True	True	False		
Sequence Done	Bool	false	Non-retain	True	True	True	False		
InOut									
Static									
C Limit	DInt	0	Non-retain	True	True	True	False		
FAULT	Bool	false	Non-retain	True	True	True	False		
Step	DInt	0	Non-retain	True	True	True	False		
Sequence Active	Bool	false	Non-retain	True	True	True	False		
ptrig[00]	Bool	false	Non-retain	True	True	True	False		
ptrig[0]	Bool	false	Non-retain	True	True	True	False		
ptrig[1]	Bool	false	Non-retain	True	True	True	False		
ptrig[1.1]	Bool	false	Non-retain	True	True	True	False		
ptrig[1.2]	Bool	false	Non-retain	True	True	True	False		
ptrig[2]	Bool	false	Non-retain	True	True	True	False		
ptrig[3]	Bool	false	Non-retain	True	True	True	False		
ptrig[4]	Bool	false	Non-retain	True	True	True	False		
ptrig[5]	Bool	false	Non-retain	True	True	True	False		
ptrig[6]	Bool	false	Non-retain	True	True	True	False		
ptrig[7]	Bool	false	Non-retain	True	True	True	False		
ptrig[8]	Bool	false	Non-retain	True	True	True	False		
ptrig[9]	Bool	false	Non-retain	True	True	True	False		
ptrig[10]	Bool	false	Non-retain	True	True	True	False		
ptrig[11]	Bool	false	Non-retain	True	True	True	False		
ptrig[12]	Bool	false	Non-retain	True	True	True	False		
ptrig[13]	Bool	false	Non-retain	True	True	True	False		
ptrig[14]	Bool	false	Non-retain	True	True	True	False		
ptrig[15]	Bool	false	Non-retain	True	True	True	False		
ptrig[16]	Bool	false	Non-retain	True	True	True	False		
ptrig[17]	Bool	false	Non-retain	True	True	True	False		
ptrig[18]	Bool	false	Non-retain	True	True	True	False		
ptrig[19]	Bool	false	Non-retain	True	True	True	False		
ptrig[20]	Bool	false	Non-retain	True	True	True	False		
ptrig[21]	Bool	false	Non-retain	True	True	True	False		
ptrig[22]	Bool	false	Non-retain	True	True	True	False		
ptrig[23]	Bool	false	Non-retain	True	True	True	False		
ptrig[24]	Bool	false	Non-retain	True	True	True	False		
ptrig[25]	Bool	false	Non-retain	True	True	True	False		
ptrig[26]	Bool	false	Non-retain	True	True	True	False		
ptrig[27]	Bool	false	Non-retain	True	True	True	False		
ptrig[28]	Bool	false	Non-retain	True	True	True	False		
ptrig[29]	Bool	false	Non-retain	True	True	True	False		
ptrig[30]	Bool	false	Non-retain	True	True	True	False		
ptrig[31]	Bool	false	Non-retain	True	True	True	False		

Name	Data type	Default value	Retain	Accessible from HMI/OPC UA/Web API	Writable from HMI/OPC UA/Web API	Visible in HMI engineering	Setpoint	Supervision	Comment
ptrig[32]	Bool	false	Non-retain	True	True	True	False		
ptrig[33]	Bool	false	Non-retain	True	True	True	False		
ptrig[34]	Bool	false	Non-retain	True	True	True	False		
ptrig[35]	Bool	false	Non-retain	True	True	True	False		
ptrig[36]	Bool	false	Non-retain	True	True	True	False		
Pnp Grab Delay	TON_TIME		Non-retain	True	True	True	False		
PT	Time	T#1s	Non-retain	True	True	True	False		
ET	Time	T#0ms	Non-retain	True	False	True	False		
IN	Bool	false	Non-retain	True	True	True	False		
Q	Bool	false	Non-retain	True	False	True	False		
Pnp Grab Delay2	TON_TIME		Non-retain	True	True	True	False		
PT	Time	T#1s	Non-retain	True	True	True	False		
ET	Time	T#0ms	Non-retain	True	False	True	False		
IN	Bool	false	Non-retain	True	True	True	False		
Q	Bool	false	Non-retain	True	False	True	False		
Pnp Grab Delay3	TON_TIME		Non-retain	True	True	True	False		
PT	Time	T#1s	Non-retain	True	True	True	False		
ET	Time	T#0ms	Non-retain	True	False	True	False		
IN	Bool	false	Non-retain	True	True	True	False		
Q	Bool	false	Non-retain	True	False	True	False		
Pnp Grab Delay4	TON_TIME		Non-retain	True	True	True	False		
PT	Time	T#1s	Non-retain	True	True	True	False		
ET	Time	T#0ms	Non-retain	True	False	True	False		
IN	Bool	false	Non-retain	True	True	True	False		
Q	Bool	false	Non-retain	True	False	True	False		
Pnp Grab Delay5	TON_TIME		Non-retain	True	True	True	False		
PT	Time	T#1s	Non-retain	True	True	True	False		
ET	Time	T#0ms	Non-retain	True	False	True	False		
IN	Bool	false	Non-retain	True	True	True	False		
Q	Bool	false	Non-retain	True	False	True	False		
Temp									
Constant									

Network 1: Fault

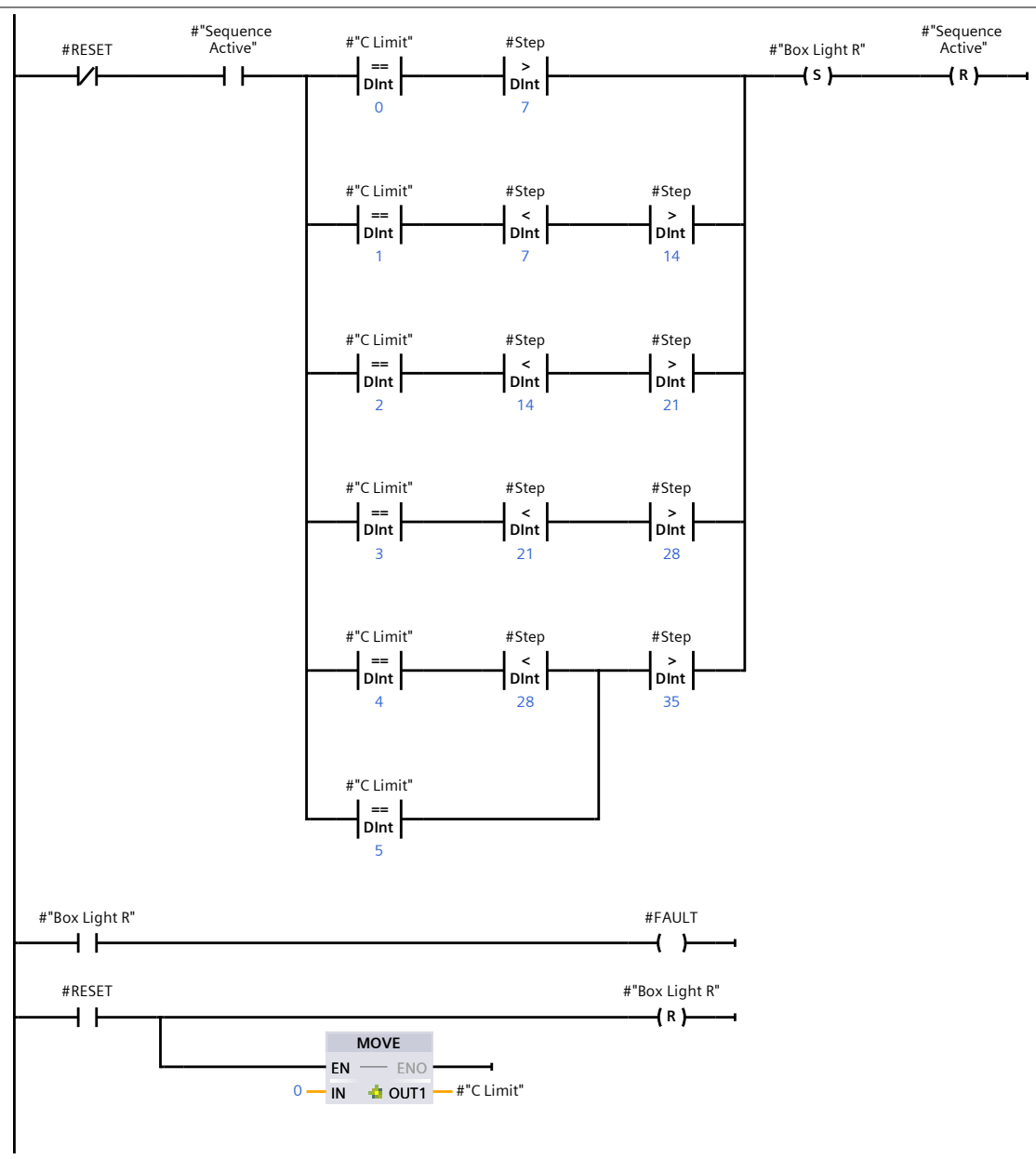

Network 2: Sequence done

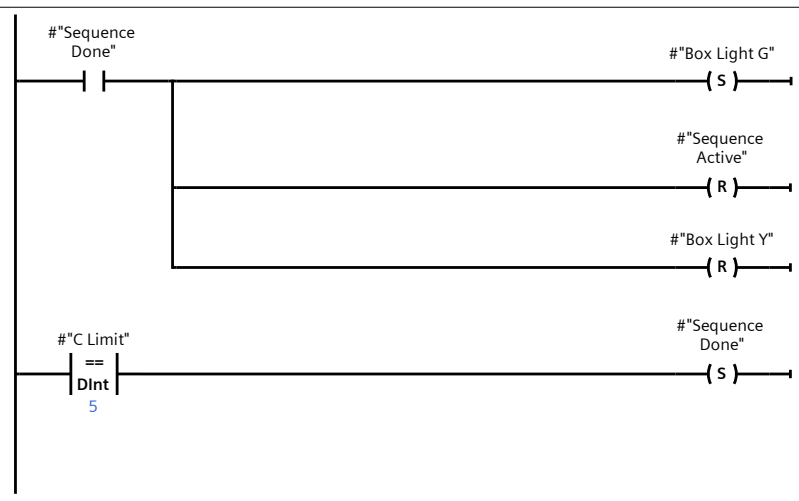

Network 3: Idle(reworked)

Network 4: Step 0 - Sequence Activiation

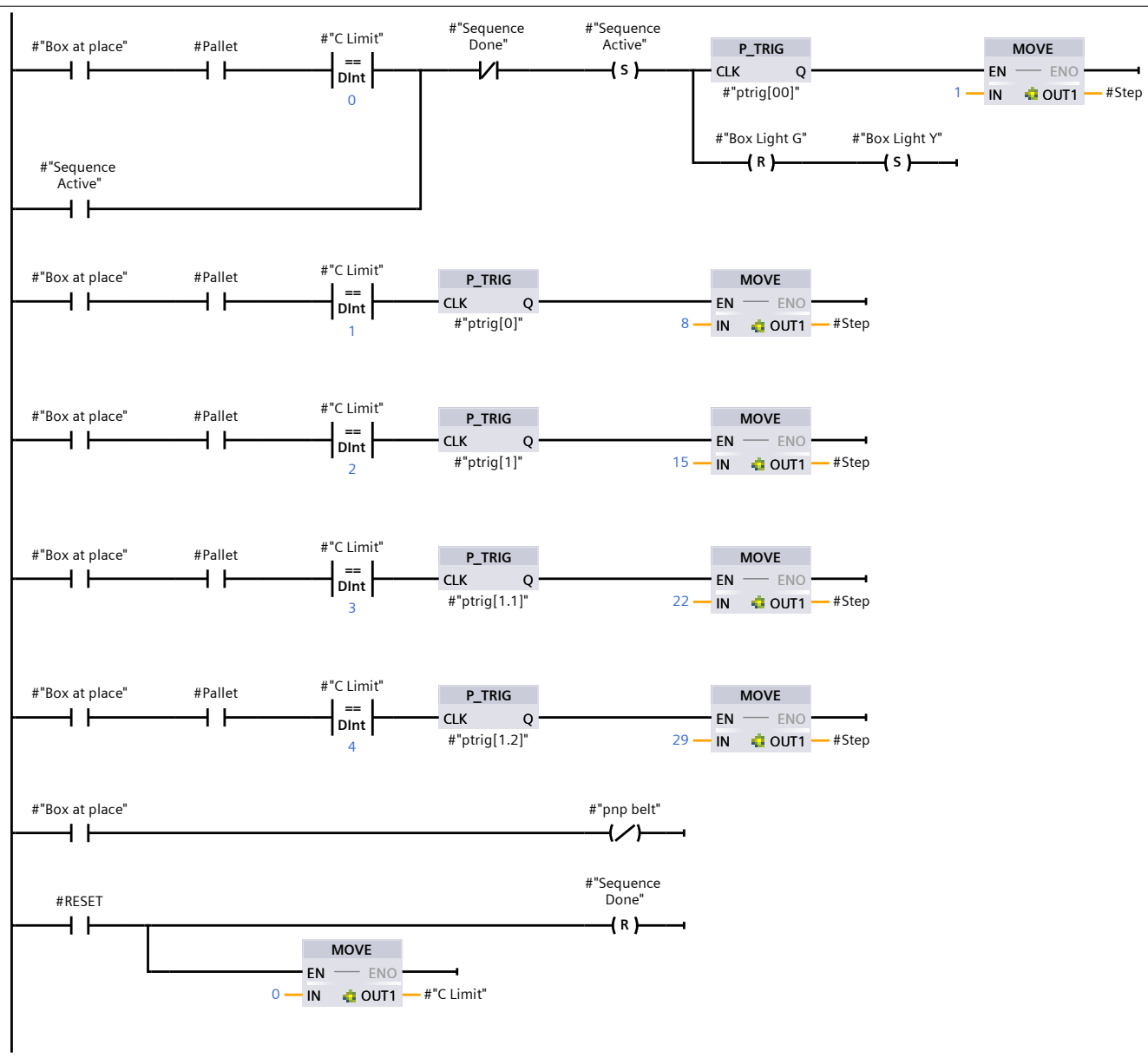

Network 5: Step 1 - Move arm to item position

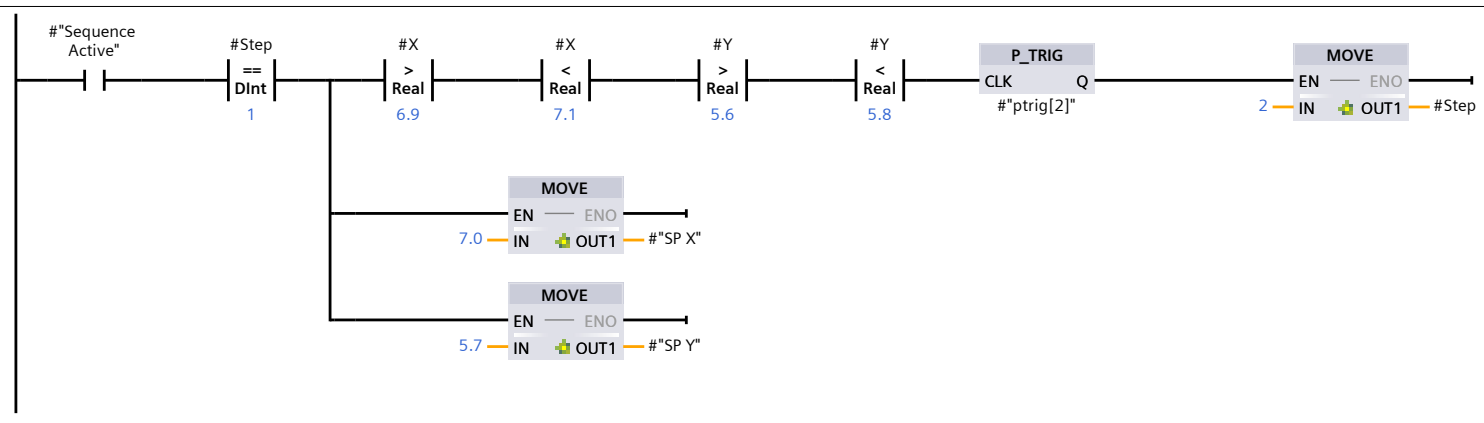

Network 6: Step 2 - Move arm down to item position

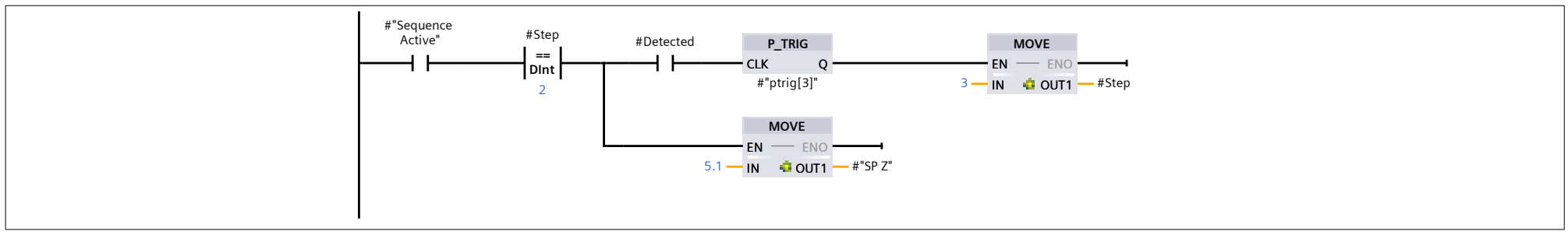

Network 7: Step 3 - Grab item

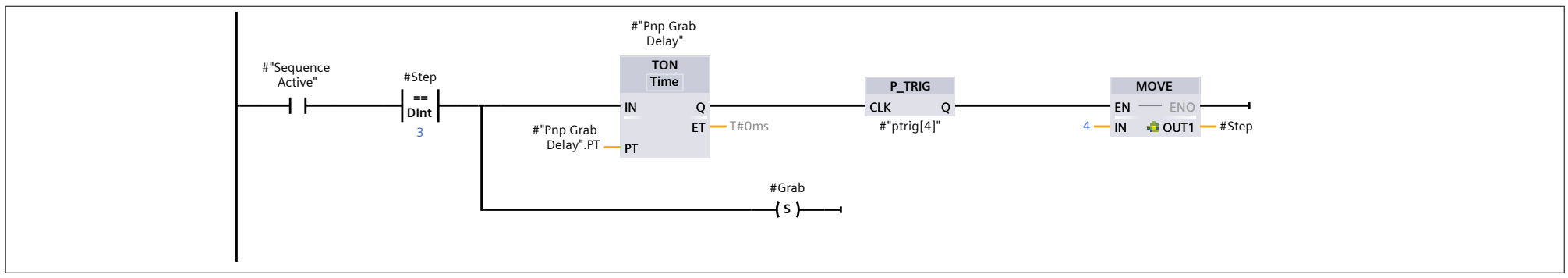

Network 8: Step 4 - Move arm up

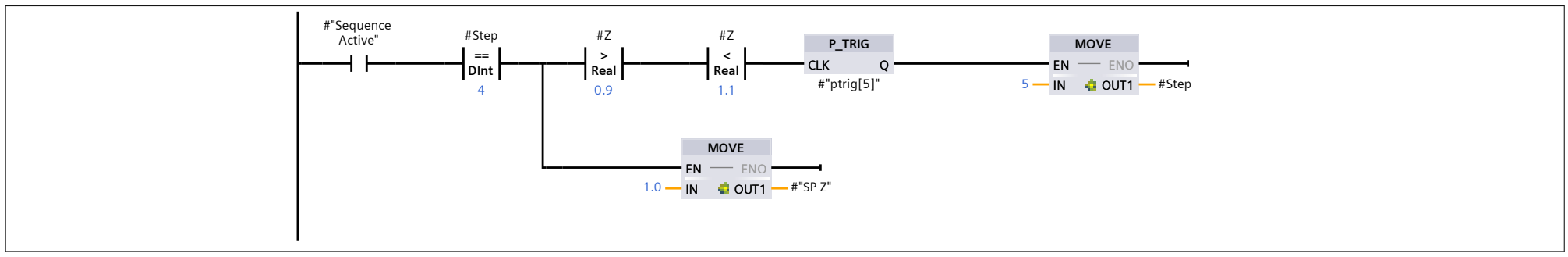

Network 9: Step 5 - Move arm to pallet position 1

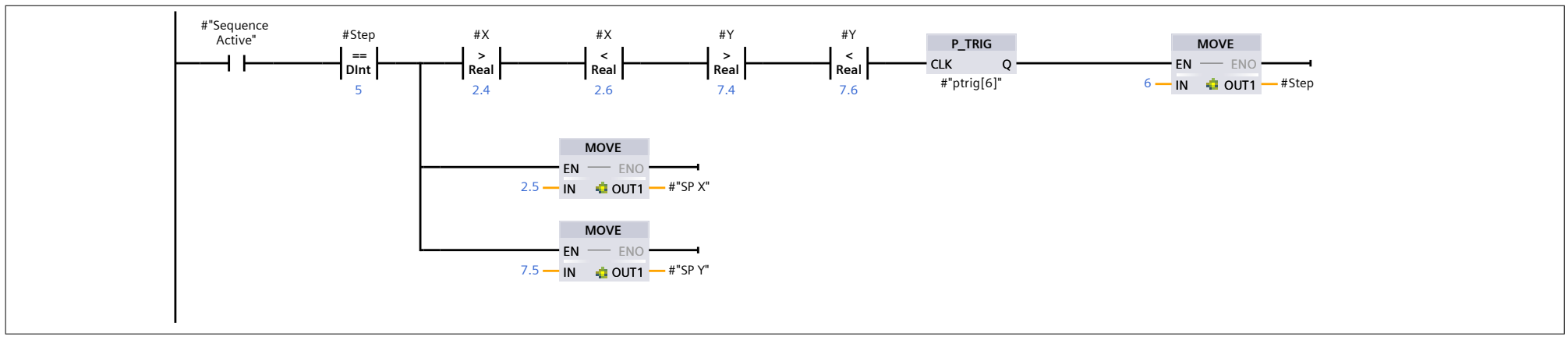

Network 10: Step 6 - Move arm down to pallet position

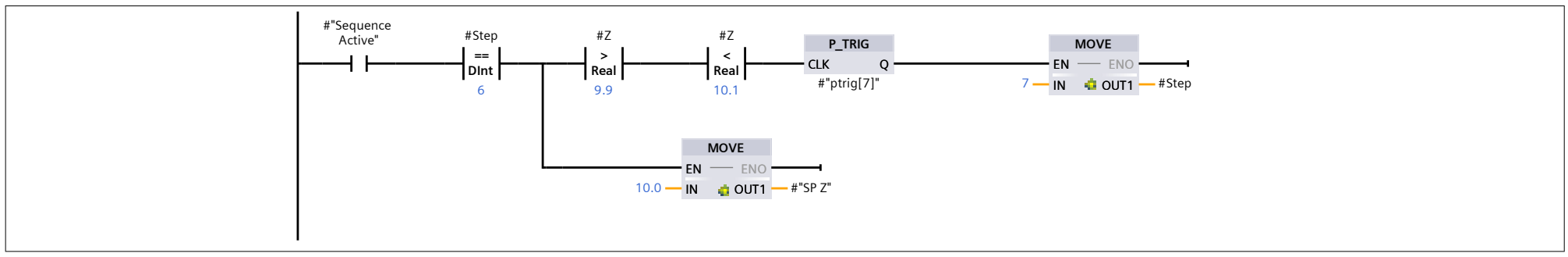

Network 11: Step 7 - Release Grab & Move Arm up

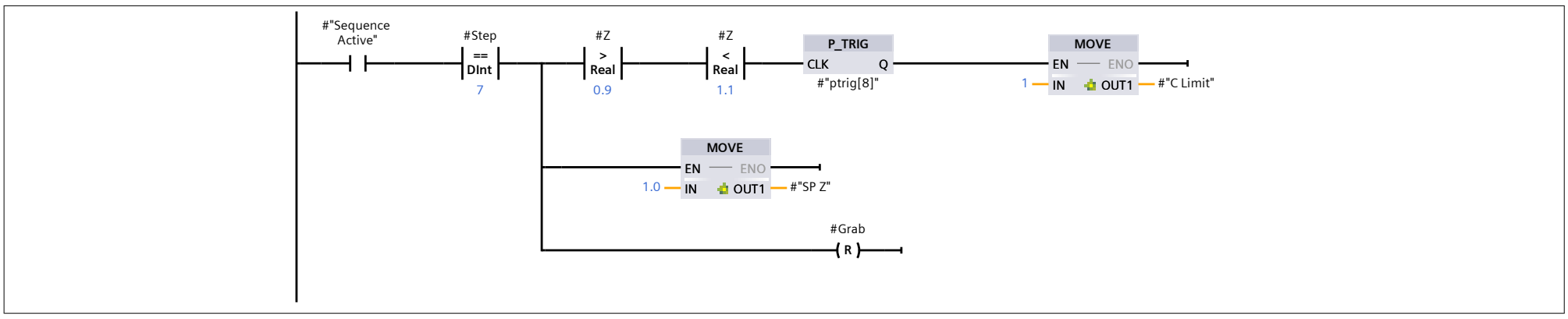

Network 12: Step 8 - Move arm to item position

Repeats step 1-7 (with different XY coordinates)

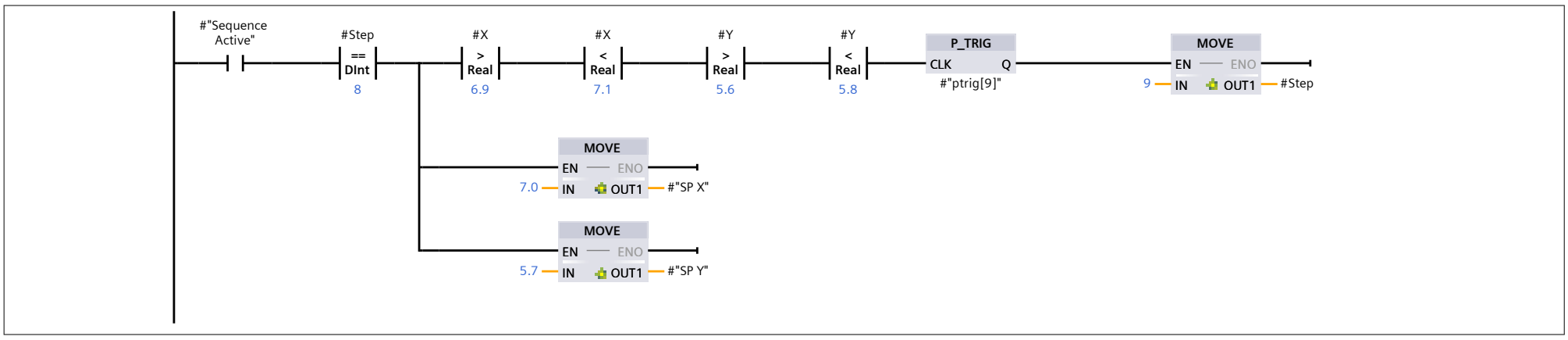

Network 13: Step 9 - Move arm down to item position

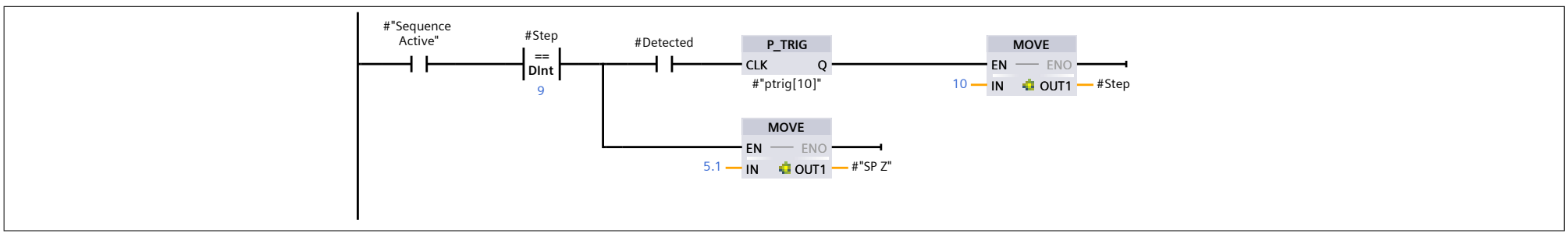

Network 14: Step 10 - Grab item

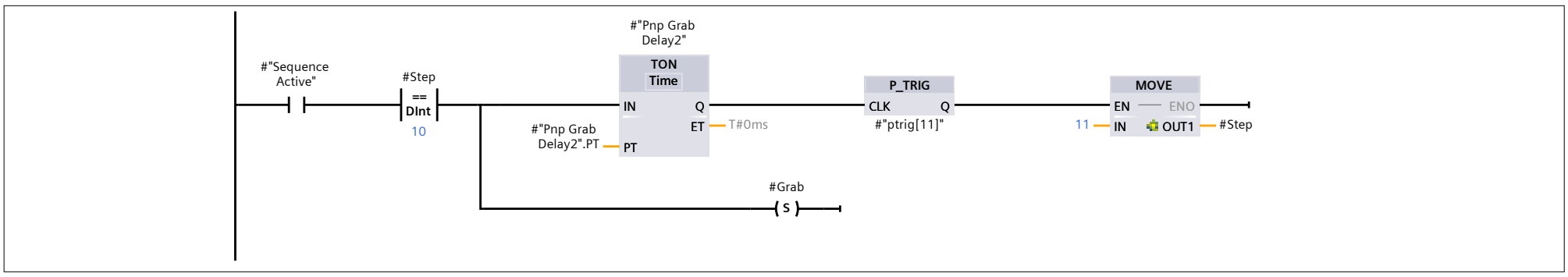

Network 15: Step 11 - Move arm up

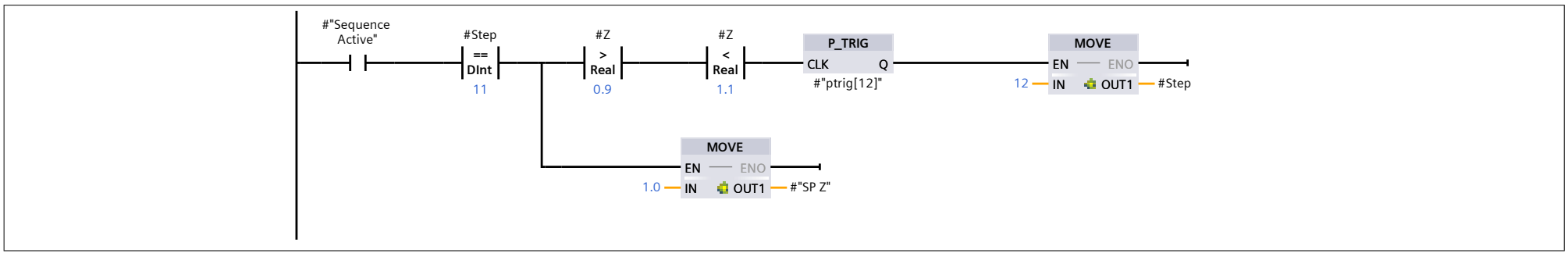

Network 16: Step 12 - Move arm to pallet position 2

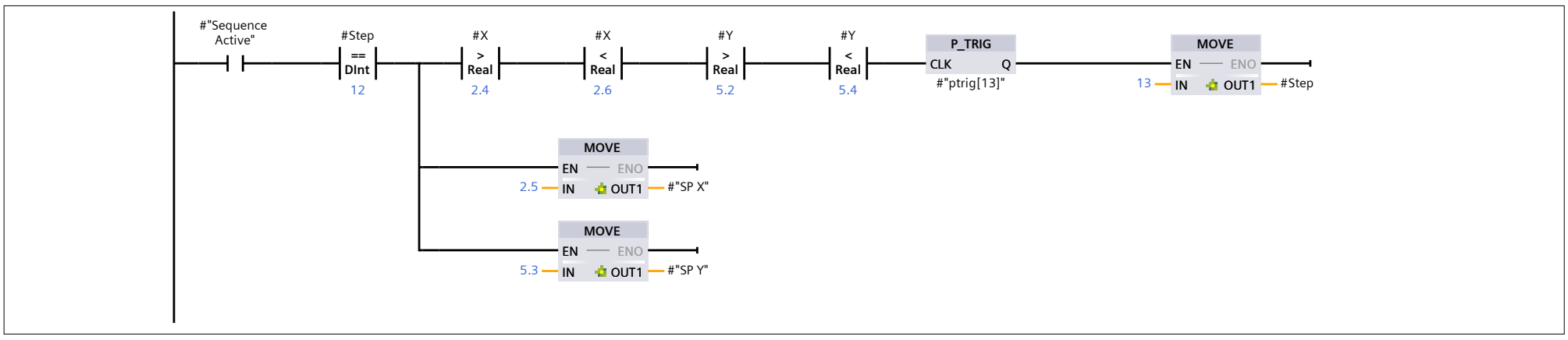

Network 17: Step 13 - Move arm down to pallet position

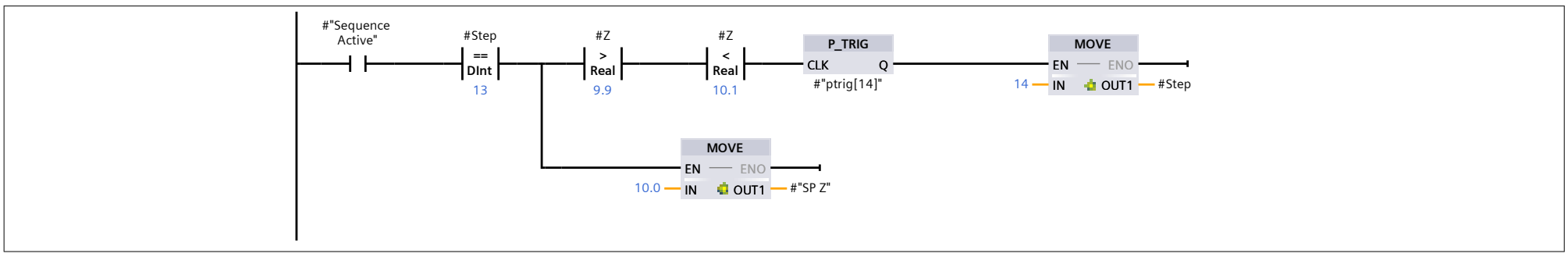

Network 18: Step 14 - Release Grab & Move arm up

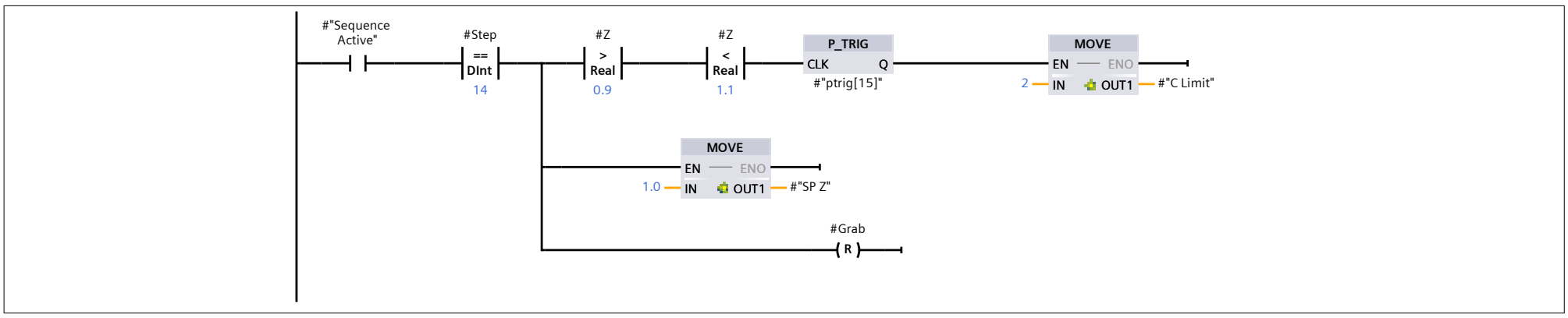

Network 19: Step 15 - Move arm to item position

Repeats step 8-14 (with different XY coordinates)

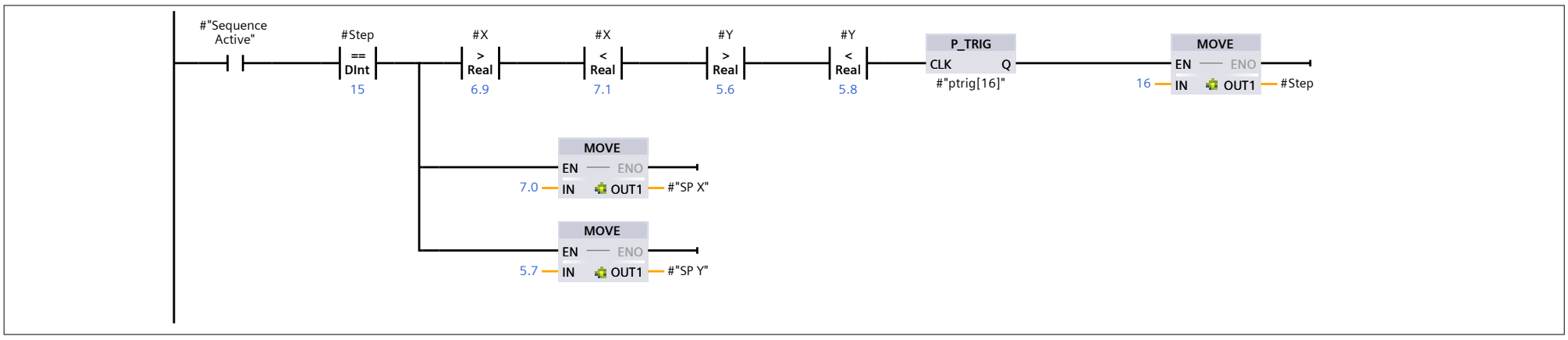

Network 20: Step 16 - Move arm down to item position

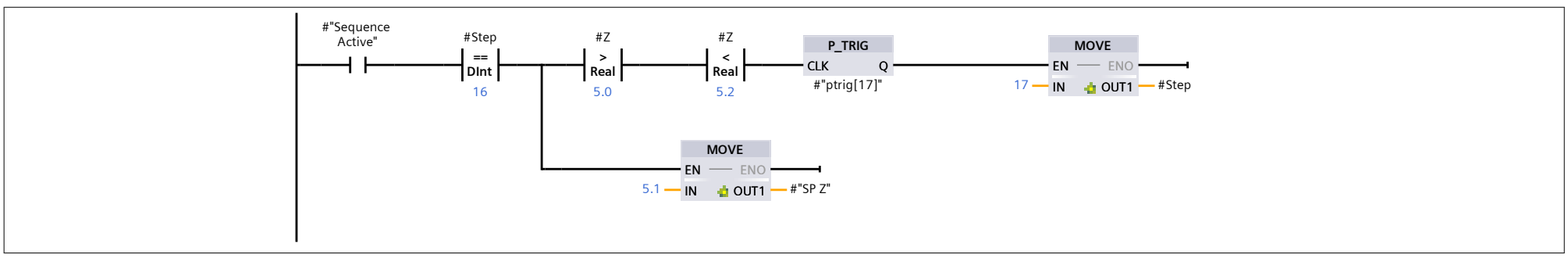

Network 21: Step 17 - Grab item

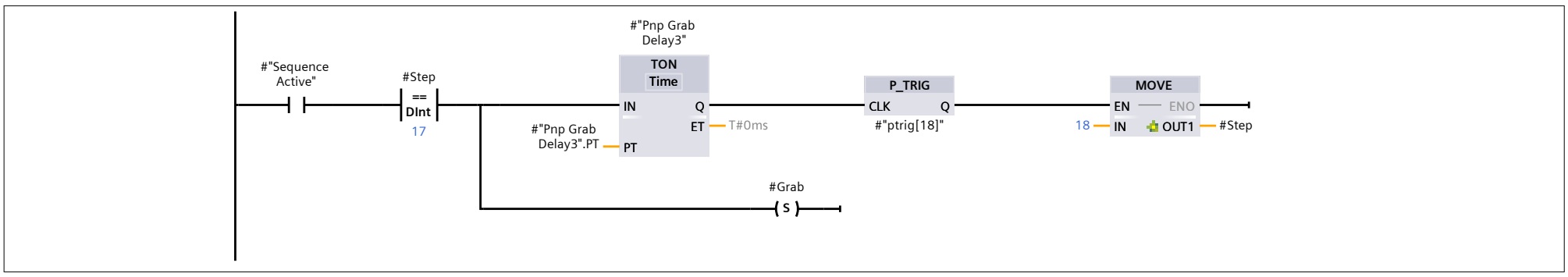

Network 22: Step 18 - Move arm up

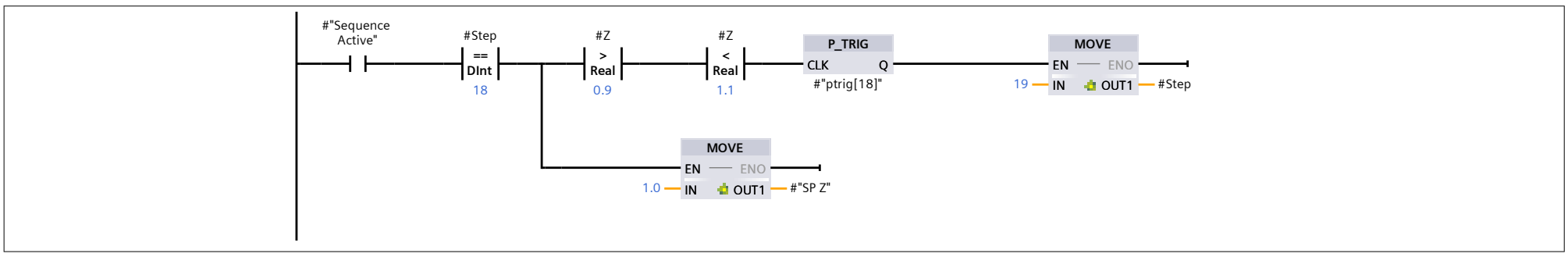

Network 23: Step 19 - Move arm to pallet position 3

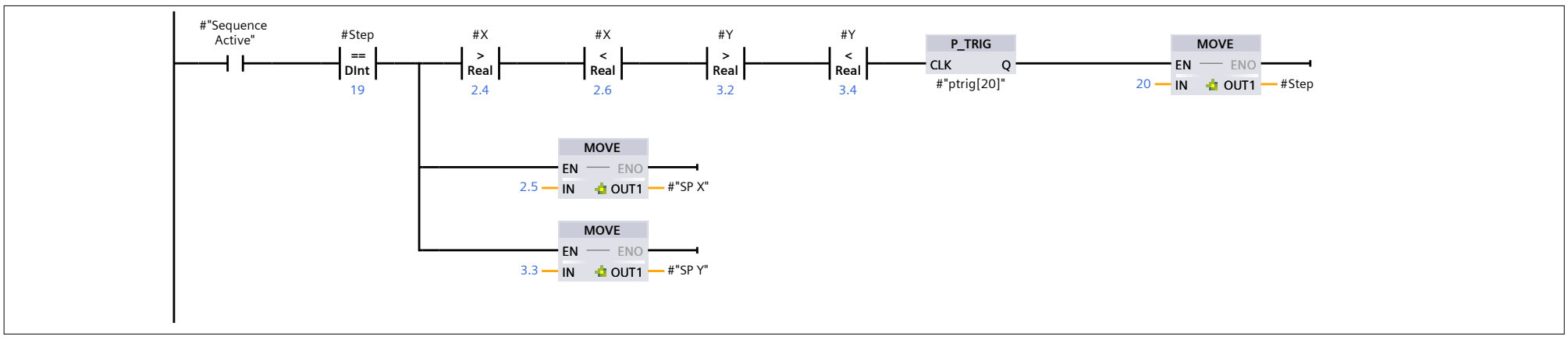

Network 24: Step 20 - Move arm down to pallet position

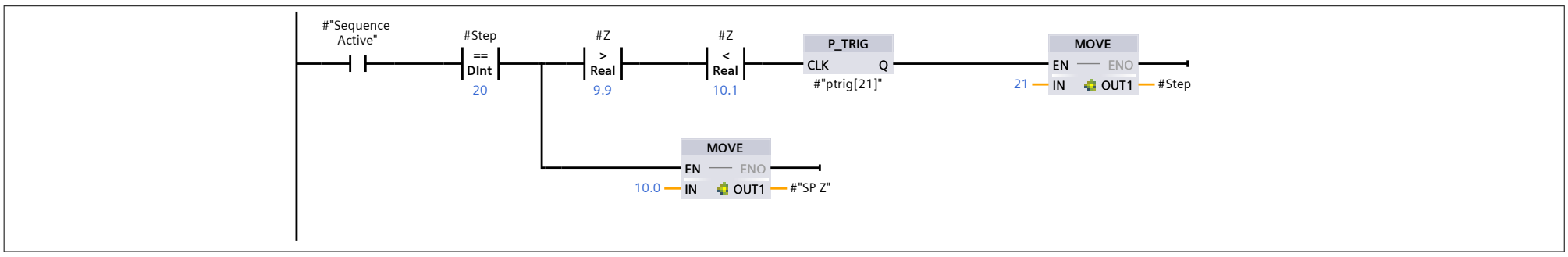

Network 25: Step 21 - Release Grab & Move Arm up

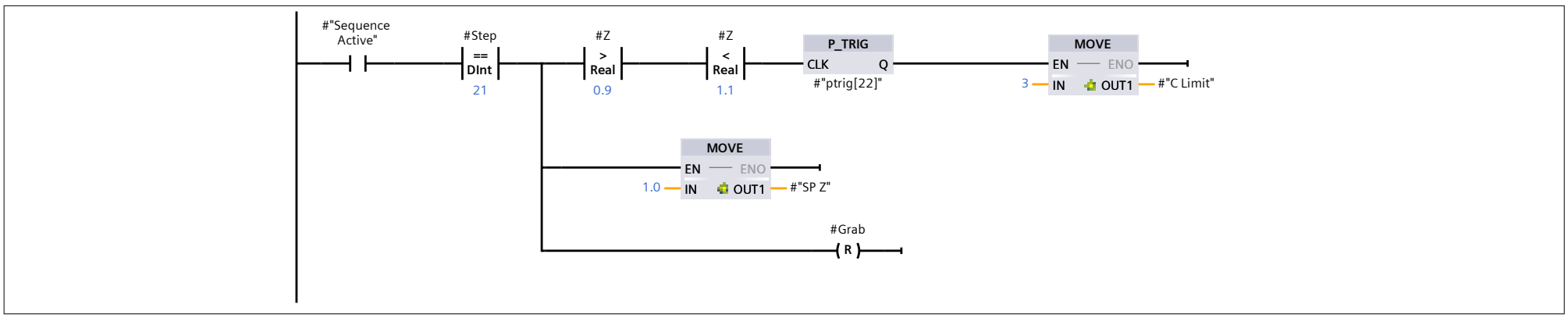

Network 26: Step 22 - Move arm to item position

Repeats step 8-14 (with different XY coordinates)

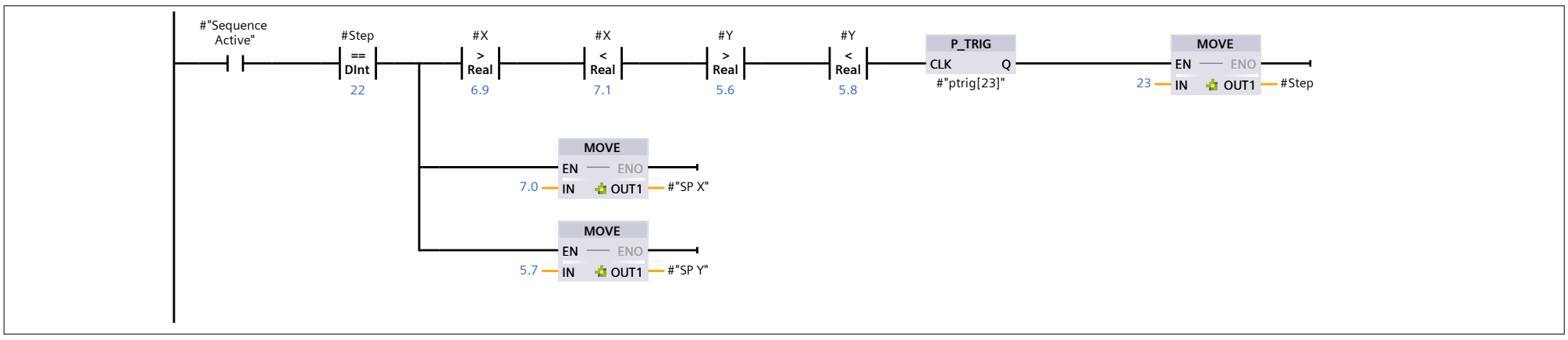

Network 27: Step 23 - Move arm down to item position

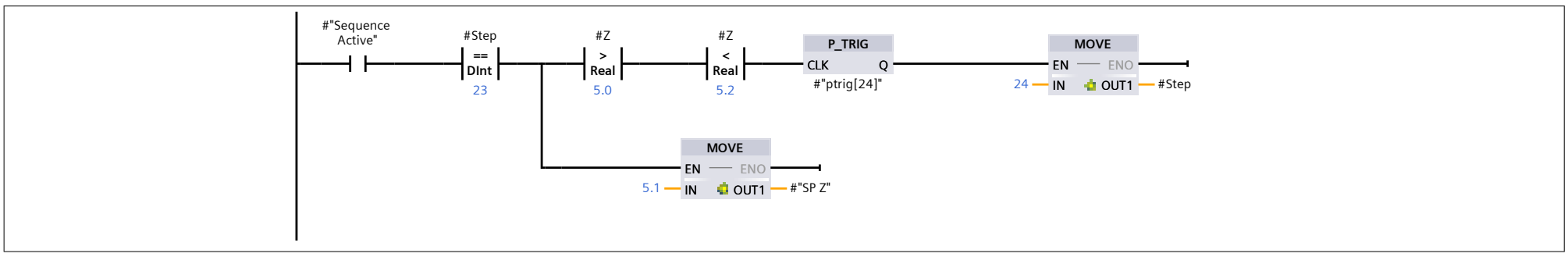

Network 28: Step 24 - Grab item

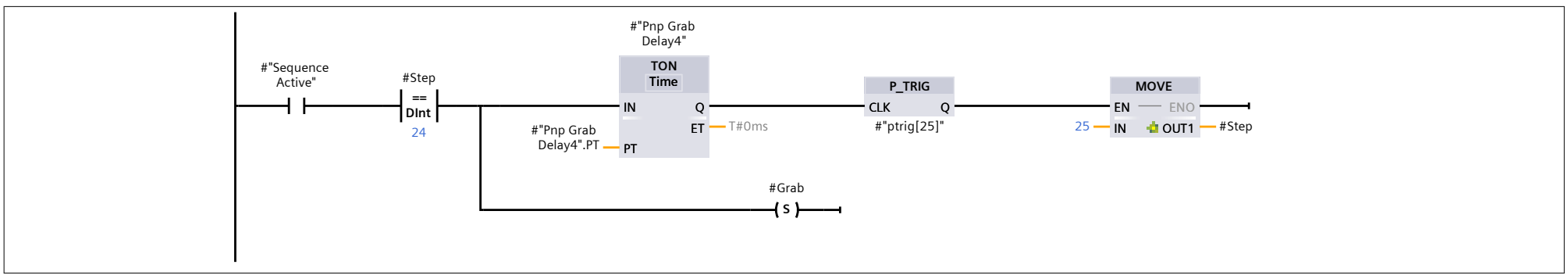

Network 29: Step 25 - Move arm up

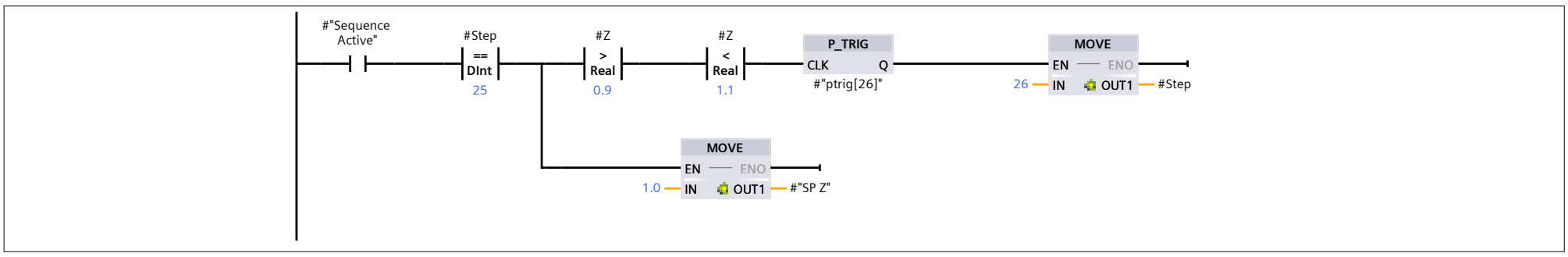

Network 30: Step 26 - Move arm to pallet position 4

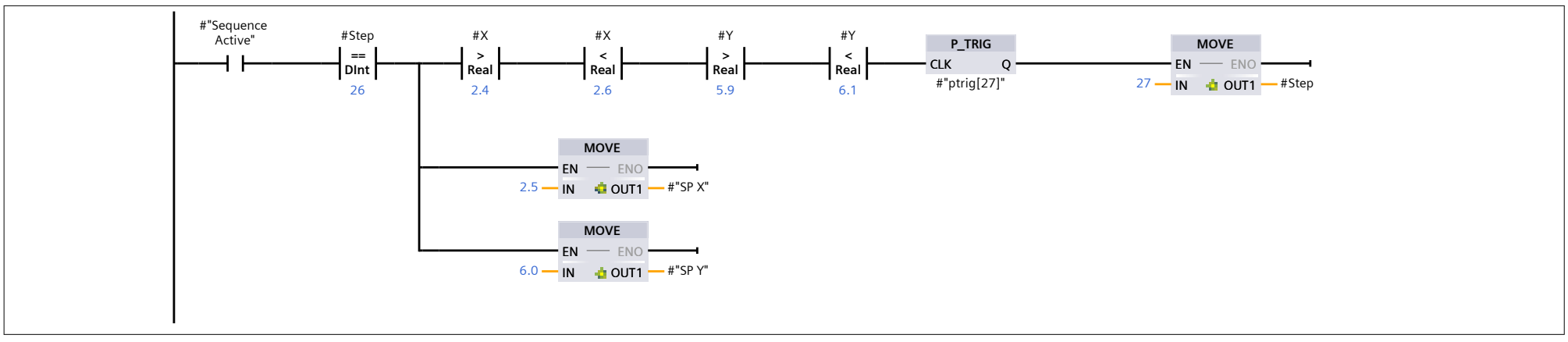

Network 31: Step 27 - Move arm down to pallet position

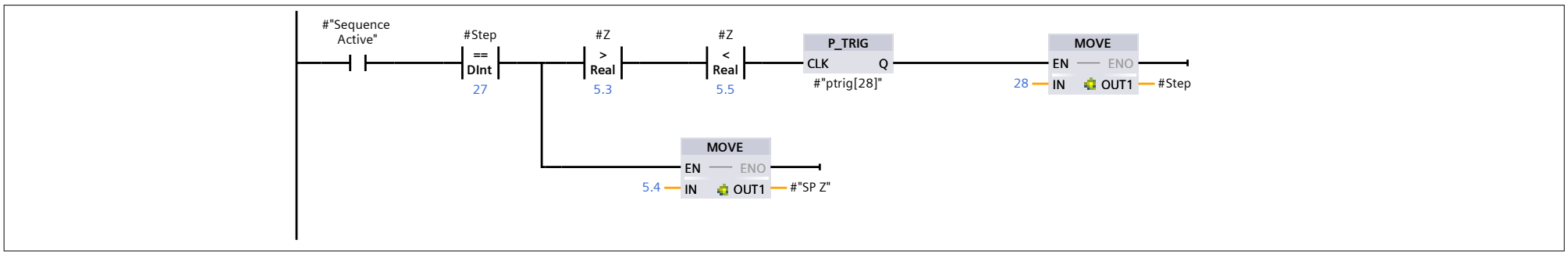

Network 32: Step 28 - Release Grab & Move Arm up

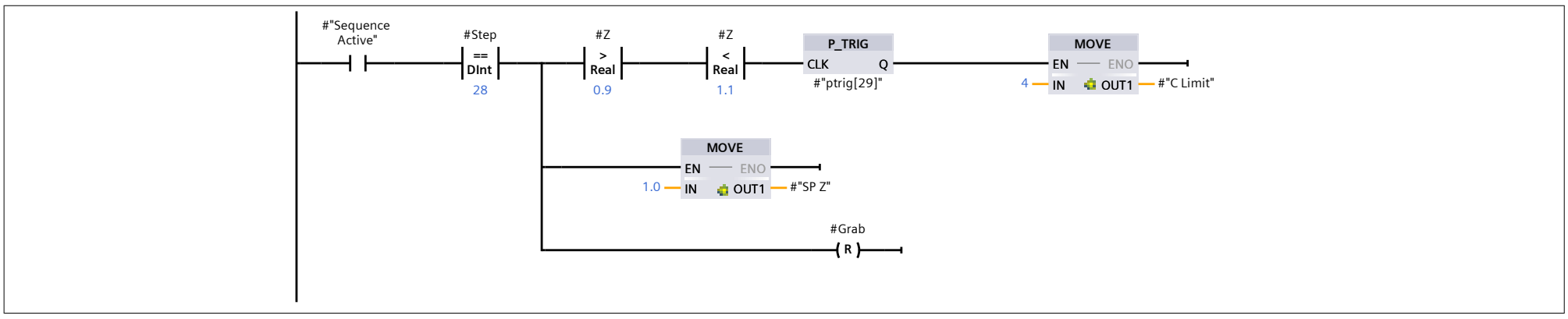

Network 33: Step 29 - Move arm to item position

Repeats step 8-14 (with different XY coordinates)

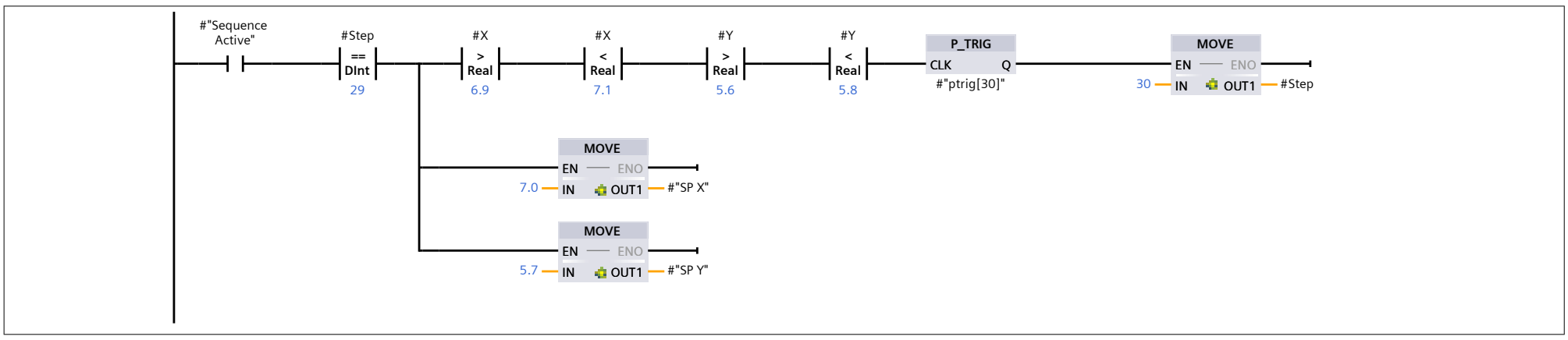

Network 34: Step 30 - Move arm down to item position

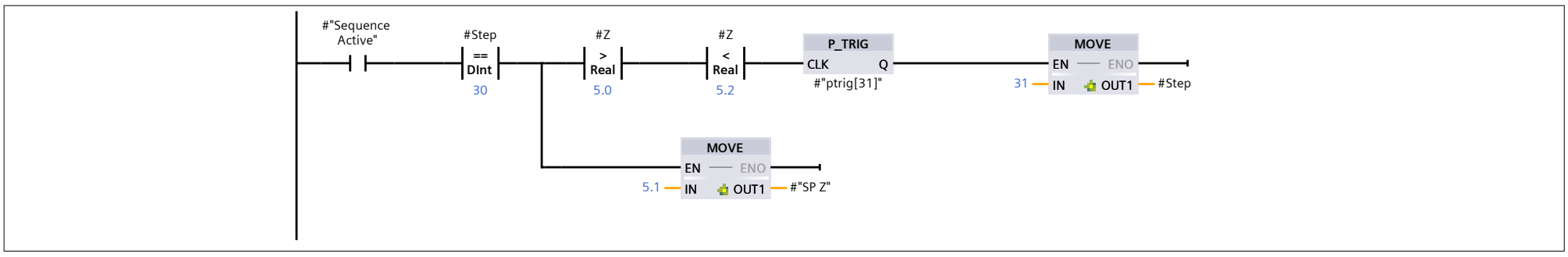

Network 35: Step 31 - Grab item

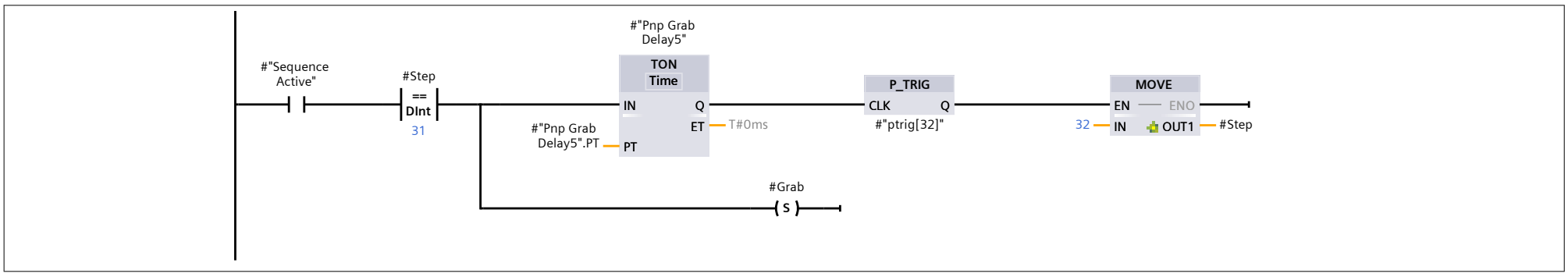

Network 36: Step 32 - Move arm up

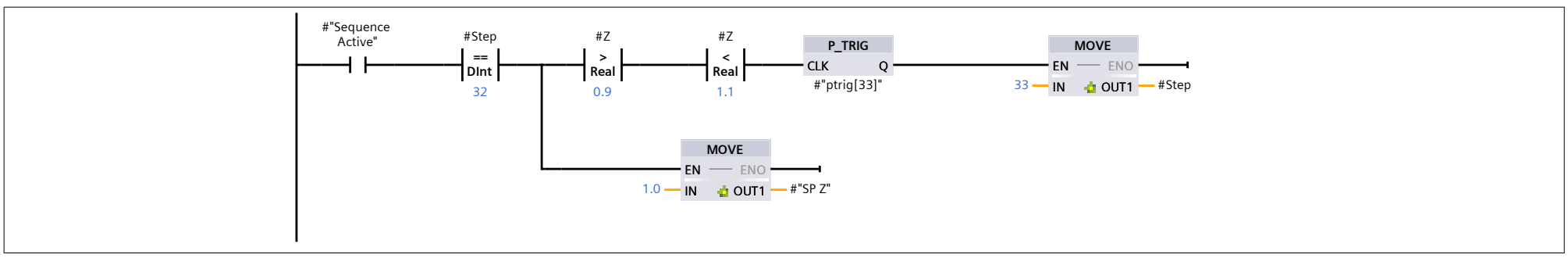

Network 37: Step 33- Move arm to pallet position 5

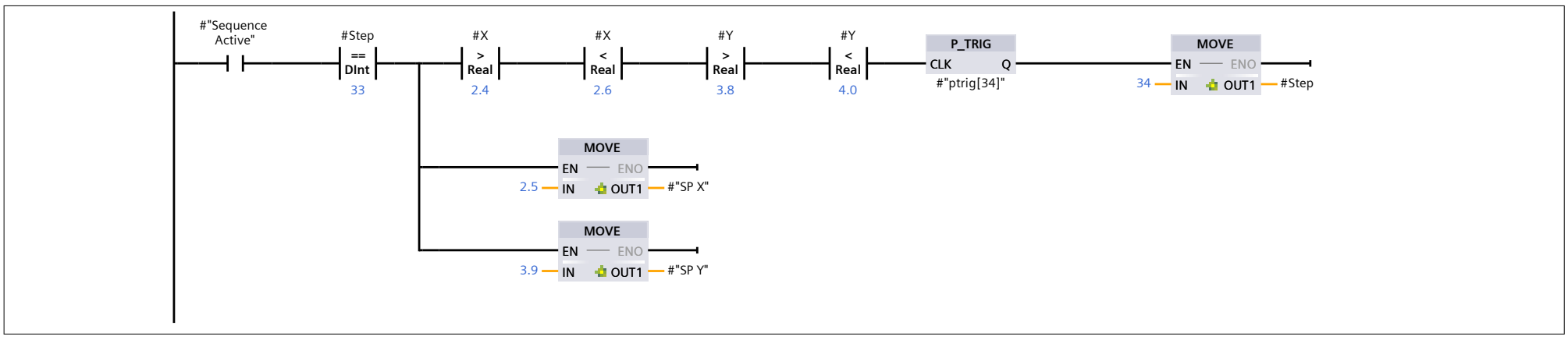

Network 38: Step 34 - Move arm down to pallet position

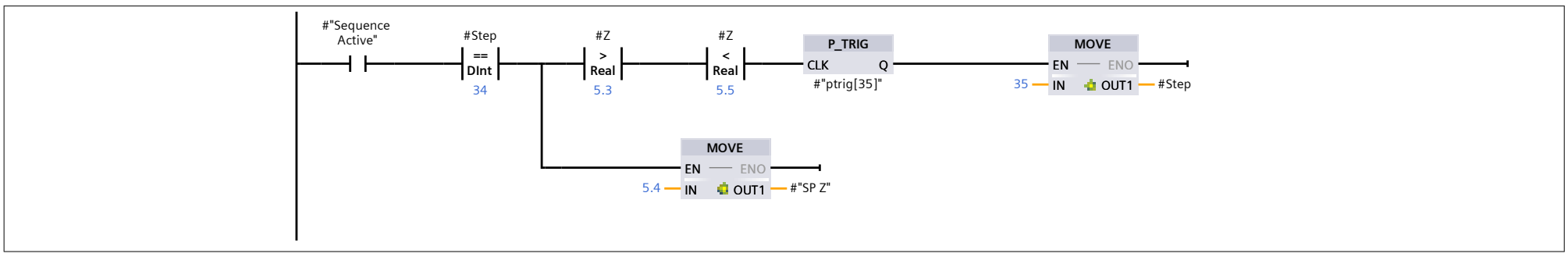
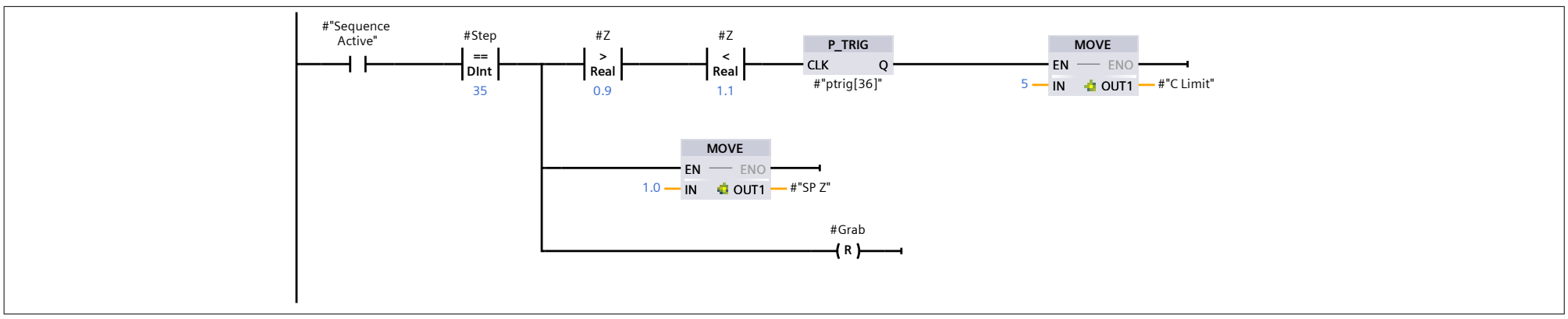
Network 39: Step 35 - Release Grab & Move Arm up